General Disclaimer

One or more of the Following Statements may affect this Document

- This document has been reproduced from the best copy furnished by the organizational source. It is being released in the interest of making available as much information as possible.

- This document may contain data, which exceeds the sheet parameters. It was furnished in this condition by the organizational source and is the best copy available.

- This document may contain tone-on-tone or color graphs, charts and/or pictures, which have been reproduced in black and white.

- This document is paginated as submitted by the original source.

- Portions of this document are not fully legible due to the historical nature of some of the material. However, it is the best reproduction available from the original submission.

Produced by the NASA Center for Aerospace Information (CASI)

F. MONTEGANI

FEB 20 1973

NASA CR 120849
BOEING D3-8611-1

ACOUSTIC RADIATION FROM LINED, UNFLANGED DUCTS — ACOUSTIC SOURCE DISTRIBUTION PROGRAM

BY
R. J. BECKEMEYER AND D. T. SAWDY

DECEMBER 12, 1971

THE BOEING COMPANY
WICHITA DIVISION · WICHITA, KANSAS 67210

(NASA-CR-120849) ACOUSTIC RADIATION FROM LINED, UNFLANGED DUCTS: ACOUSTIC SOURCE DISTRIBUTION PROGRAM (Boeing Co., Wichita, Kans.) 202 p HC $7.25 CSCL 20A

N75-28849

G3/71 Unclas 29846

PREPARED FOR

NATIONAL AERONAUTICS AND SPACE ADMINISTRATION

NASA-LEWIS RESEARCH CENTER
CONTRACT NAS 3-14321
H. BLOOMER, PROJECT MANAGER

AUG 1975 RECEIVED NASA STI FACIL INPUT BRANCH

AUG 197 RECEIVED STI FACILITY

FOREWORD

The work described herein was done by The Boeing Company, Wichita Division, under NASA contract NAS 3-14321 with Mr. H. Bloomer, V/STOL and Noise Division, NASA - Lewis Research Center, as Project Manager.

ABSTRACT

An acoustic radiation analysis has been developed to predict the far field characteristics of fan noise radiated from an acoustically lined unflanged duct. This analysis is comprised of three modular digital computer programs which together provide a capability of accounting for the impedance mismatch at the duct exit plane. This report discusses the Acoustic Source Distribution Program whose relationship with the other two modular reports of the analysis is illustrated on the following page.

Admissible duct configurations include circular or annular, with or without an extended centerbody. This variation in duct configurations provides a capability of modeling inlet and fan duct noise radiation.

DEVELOPMENT OF ACOUSTIC RADIATION ANALYSIS
OF TURBOFAN NOISE FROM LINED, UNFLANGED DUCTS

OVERALL REPORT ORGANIZATION

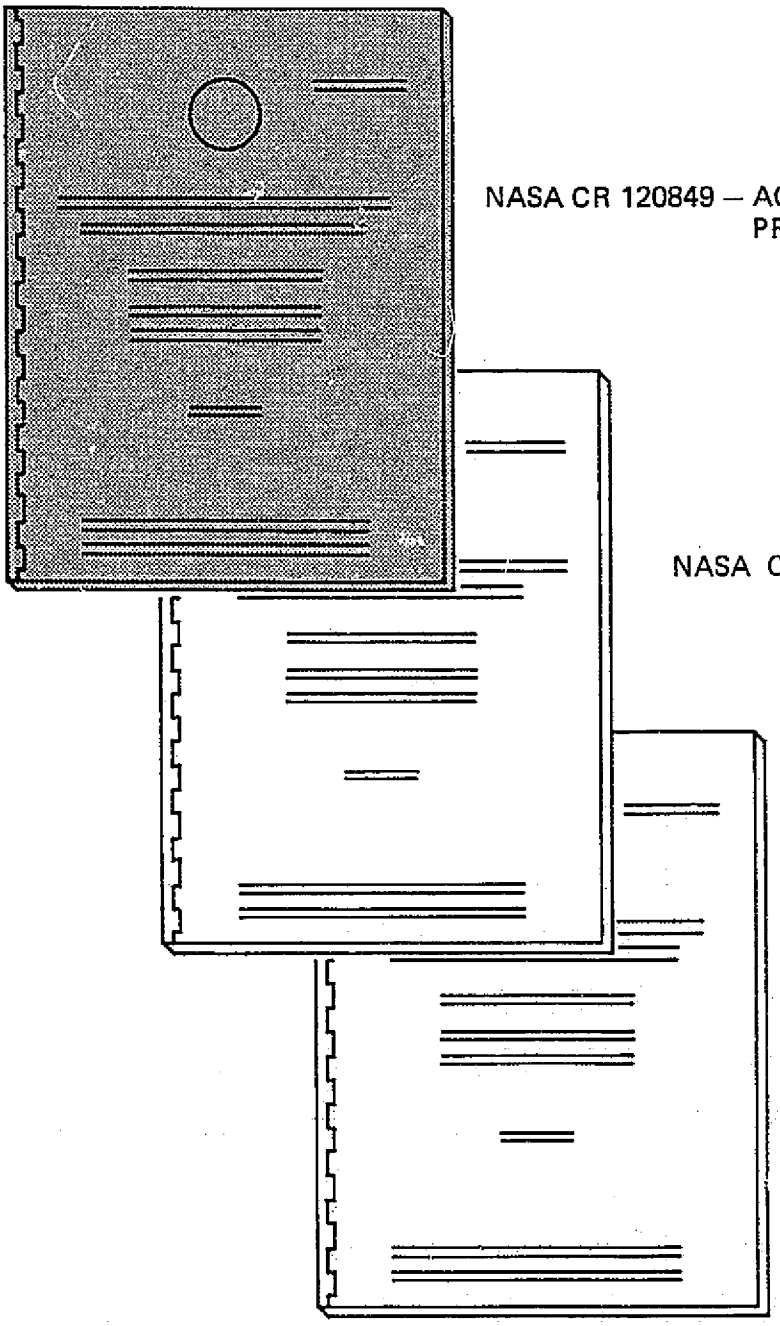

NASA CR 120849 – ACOUSTIC SOURCE DISTRIBUTION PROGRAM

NASA CR 120850 – DIRECTIVITY INDEX PROGRAM

NASA CR 120851 – DUCT TERMINATION IMPEDANCE PROGRAM

TABLE OF CONTENTS

		PAGE
	NOMENCLATURE	vi
	INDEX OF FIGURES	vii
1.0	INTRODUCTION	1
1.1	Background	1
1.2	Technical Approach	2
2.0	MATHEMATICAL DEVELOPMENT	5
3.0	METHOD OF SOLUTION	9
4.0	RESULTS	13
4.1	Application	13
4.2	Limitations	14
5.0	CONCLUSIONS AND RECOMMENDATIONS	17
6.0	REFERENCES	19
7.0	FIGURES	21
	APPENDIX 1 – PROGRAM DESCRIPTION	41
	Nomenclature	
	Input	
	Program Flow	
	Output	
	APPENDIX 2 – PROGRAM FLOW CHARTS	47
	APPENDIX 3 – MAIN PROGRAM LISTING	85
	APPENDIX 4 – GAUSS SUBROUTINE LISTING	103
	APPENDIX 5 – MATX SUBROUTINE LISTING	107
	APPENDIX 6 – INVT SUBROUTINE LISTING	113
	APPENDIX 7 – VELINT SUBROUTINE	117
	APPENDIX 8 – EXAMPLE PROBLEMS	123
	Listing of Input Data	
	Output for Example Problem	

NOMENCLATURE

Analytical Variables

a	Centerbody Radius
[A]	Matrix
b	Outer Duct Radius
[B]	Matrix
c	Sound Speed in Air
[C]	Matrix
[D]	Matrix
k	Wavenumber, $k = \omega/c$
m	Angular Mode No.
r	Radial Coordinate
r_j	Radial Coordinate Integration Variable
R	Distance Between Points
R_j	Distance Between Point on Duct and Field Point
t	Time
u	Radial Velocity Component
v	Axial Velocity Component
V	Velocity Distribution on Exit Face
z	Axial Coordinate
α_j	Term in Integrand Defined in Equation (7)
γ_j	Term in Integrand Defined in Equation (7)
δ_j	Delta Function
η_j	Boundary of Integration over a Given Box on the Duct Outer Wall
θ	Angular Coordinate
θ_j	Angular Coordinate Integration Variable
ρ	Air Density
ξ_j	Boundary of Integration over a Given Box on the Centerbody Wall
ϕ	Velocity Potential
Φ_j	Source Strength Distribution
ω	Frequency, Radians/Second

INDEX OF FIGURES

NO.		PAGE
1	Admissible Duct Configurations	23
2	Geometry	24
3	Duct Breakdown	25
4	Control Box Angular Size	26
5	Source Strength Distribution — Problem 1 — Φ_0	27
6	Source Strength Distribution — Problem 2 — Φ_0	28
7	Source Strength Distribution — Problem 3 — Φ_0	29
8	Source Strength Distribution — Problem 4 — Φ_0	30
9	Source Strength Distribution — Problem 1 — Φ_1	31
10	Source Strength Distribution — Problem 2 — Φ_1	32
11	Source Strength Distribution — Problem 3 — Φ_1	33
12	Source Strength Distribution — Problem 4 — Φ_1	34
13	Source Strength Distribution — Problem 3 — Φ_2	35
14	Source Strength Distribution — Problem 4 — Φ_2	36
15	Normalized Directivity Pattern — Problem 1	37
16	Normalized Directivity Pattern — Problem 2	38
17	Normalized Directivity Pattern — Problem 3	39
18	Normalized Directivity Pattern — Problem 4	40

1.0 INTRODUCTION

1.1 Background

This report discusses the Acoustic Source Distribution Program which forms the foundation for a package of modular computer programs which together provide a first generation capability for the analytical prediction of the far field noise being radiated from an unflanged inlet or exhaust duct.

The development of these programs has its origin in the need for a method of predicting the far field characteristics of fan or compressor noise radiating from an acoustically treated duct. Among the techniques available in the literature are rigorous solutions for the case of sound radiation from unflanged, hard-walled circular pipes both with and without mean flow (uniform cylindrical jet) published by Levine and Schwinger, Reference 1; and Carrier, Reference 2 (valid only for plane wave propagation in the pipe); solutions for higher duct modes (no flow) by Vajnshtejn, Reference 3; and extensions to References 1, 2, and 3 by Lansing; Drischler and Pusey, Reference 4; where in the closed form solutions for higher duct modes (with flow) have been numerically evaluated. However, these solutions are not applicable to the more complex problems of noise radiated from lined and annular ducts.

A method which can be applied to more general cases is the distributed source technique in which a surface distribution of elementary acoustic sources is determined, by numerical means, such that appropriate boundary conditions are satisfied on the surface. By distributing sources over a circular or an annular aperture in an infinite plane, Morfey, References 5 and 6, and Tyler and Sofrin, Reference 7, were able to predict the acoustic radiation characteristics of flanged ducts. Researchers in underwater acoustics, for example, Chen and Schweikert, Reference 8, have modeled the acoustical radiation properties of a vibrating body of arbitrary shape by using distributions of acoustic sources over the entire outer surface of the body. Martenson and Liu, Reference 9, extended this work to the case of an engine nacelle. By distributing sources over the nacelle walls and the source (fan) plane, they represented both the propagating field in the nacelle and the radiating field exterior to the nacelle, thus, accounting for the diffraction effects at the lip of the nacelle exit plane.

The Acoustic Source Distribution Program described herein is a further extension to these various source distribution methods which builds on the previous work to yield what is felt to be a basically more versatile method of approach. The program utilizes ducts of semi-infinite geometry, from which nacelles may be modeled by coupling of the inlet and exhaust radiation patterns in the far-field, Reference 10. The approach taken is to distribute acoustic sources over the duct walls and the duct exit plane. In this manner, edge diffraction effects are fully taken into account; however, the choice of the source and propagation (interior duct) model to be utilized is fairly arbitrary. The two problems are coupled at the exit plane through consideration of the duct termination impedance, Reference 11.

1.2 Technical Approach

The approach taken here involves the application of a numerical technique, the box-integration method, to determine a spatial distribution of acoustic sources over the duct walls and exit plane which satisfies the specified boundary conditions. The conditions imposed are, first, that the acoustic perturbation velocity normal to the rigid outer duct walls vanish, and second, that the velocity distribution over the face of the duct exit plane equals that associated with a given angular mode of sound propagation in the duct.

Admissible duct configurations, shown in Figure 1, include unflanged circular or annular ducts, with or without an extended centerbody. Given the source distribution over the duct, the far-field directivity may be found by numerical integration of the Helmholtz integrals for the velocity potential at large distances from the duct exit plane, Reference 10.

Note that this program assumes knowledge of the actual velocity distribution at the face of the duct. A given duct mode, when incident on the duct exit plane, will generate a reflected wave composed of other duct modes because of the termination impedance mismatch. Thus, the assumption that the velocity distribution at the exit plane is that due to an incident mode generated inside the duct is only a first approximation to the actual radiated noise. The Duct Termination Impedance Program, Reference 11, was written to provide a means for accounting for the impedance mismatch at the duct exit plane.

There are several limitations to this first generation program. First, for the sake of expediency, mean flow within the duct has been neglected. It is anticipated that this simplification will not significantly affect results for noise propagation through a locally subsonic flow field of an inlet. However, radiation through an exhaust or jet flow will undoubtedly not be prepresented properly by the present model. The second limitation to the program is restriction of the specified velocity distribution on the face of the duct to a Cos $(m\theta)$ type of angular dependance. Note that coupling of different m modes in the far-field may still be accomplished by superposition of the source distributions, Reference 10.

The assumption of a Cos $(m\theta)$angular dependence does, however, restrict the Duct Termination Impedance Program to the extent that for a velocity distribution whose angular dependence is specified by a combination of different m angular modes a separate analysis must be made for each set of angular modes. This limitation could be alleviated possibly by employing a collocation procedure in place of the box-method integration technique used in the present program.

The most restrictive limitation to the program at present is one of size and corresponding computer time. As discussed in Section 4.2, the wavelength of the radiated sound affects both the maximum box size used in the program and the required integration distance along the duct wall. To adequately represent the spatial variation of the source strength distribution over the duct there should be at least two boxes per wavelength, (i.e., the box size decreases with increasing frequency). At the same time, however, in order that

the far-field behavior at angles greater than 140 degrees be accurately represented, it is necessary that the integration on the duct outer wall extend back farther as the frequency increases. Together these two requirements indicate that at higher frequencies, a very large number of small boxes are required.

A similar problem involves the requirement for a very high number of angular boxes when attempting to represent the radiation characteristics of rotor-stator interaction modes at high angular mode numbers.

As presently viewed, the primary change required in this first generation program is the need to develop a finite length duct representation. This change is not a simple extension to the present program due to certain inherent mathematical problems, Reference 12, but the basic logic and numerical techniques used presently are directly applicable to the anticipated formulation.

2.0 MATHEMATICAL DEVELOPMENT

Figure 2 illustrates the geometry of the problem. The outer duct walls and the duct exit face are each represented by distributions of monopole singularities. Note that the source distributions along the duct walls are required to yield the unflanged duct boundary condition of zero perturbation velocity normal to the outer duct wall. The velocity potential at an arbitrary point in the region outside the duct is given by:

$$\phi(r,\theta,z,t) = \sum_{j=0}^{2} \phi_j (r,\theta,z,t) \tag{1}$$

where ϕ_0, ϕ_1, and ϕ_2 represent the contributions of the source distributions over the duct exit plane, the outer duct wall, and the extended centerbody wall, respectively.

Since ϕ must satisfy the wave equation and represent outward propagating waves, it will have the form:

$$\phi(R,t) = \frac{1}{R}\,\phi(t-R/c)$$

For discrete frequency noise, the velocity potential may then be written:

$$\phi(R,t) = \sum_{j=0}^{2} \iint_j \frac{\Phi_j e^{-i\omega(t-R_j/c)}}{R_j}\, dS_j \tag{2}$$

where

$\iint_0$ has limits $a \leq r_0 \leq b$, $0 \leq \theta \leq 2\pi$

$\iint_1$ has limits $-\infty \leq z_1 \leq 0$, $0 \leq \theta \leq 2\pi$

$\iint_2$ has limits $0 \leq z_2 \leq \infty$, $0 \leq \theta \leq 2\pi$

$$R_j = \sqrt{(r\cos\theta - \lambda_j \cos\theta_j)^2 + (r\sin\theta - \lambda_j \cos\theta_j)^2 + (z-z_j)^2}$$

$$\lambda_0 = r_0$$

$$\lambda_1 = b$$

$$\lambda_2 = a$$

$$z_0 = 0$$

PRECEDING PAGE BLANK NOT FILMED

$$dS_0 = r_0\, dr_0\, d\theta_0$$

$$dS_1 = b\, d\theta_1 dz_1$$

$$dS_2 = a\, d\theta_2 dz_2$$

The ϕ_j's are the unknown source strength distributions.

$$\Phi_0 = \Phi_0\,(r_0,\theta_0)$$

$$\Phi_1 = \Phi_1\,(\theta_1,z_1)$$

$$\Phi_2 = \Phi_2\,(\theta_2,z_2)$$

The boundary conditions to be applied are:

A. Zero normal velocity on the outer duct walls

$$U = \frac{-\partial \phi}{\partial r} = 0 \Bigg|_{\substack{r=b \\ z\leq 0}}$$

$$U = \frac{-\partial \phi}{\partial r} = 0 \Bigg|_{\substack{r=a \\ z\geq 0}} \qquad (3)$$

B. A prescribed velocity distribution over the face of the duct exit:

$$v = \frac{-\partial \phi}{\partial r} = V(r)\cos(m\theta)e^{-i\omega t} \Bigg|_{\substack{z=0 \\ a\leq r\leq b}} \qquad (4)$$

Applying Equations (3) and (4) to Equation (2) yields the equations:

$$\sum_{j=0}^{2} \iint_j \frac{\Phi_j e^{-i\omega(t-R_j/c)}}{R_j^3} \left[1-\frac{i\omega R_j}{c}\right]\left[\alpha_j\right] dS_j = V(r,\theta,0)\, e^{-i\omega t} \qquad (5)$$

$$\sum_{j=0}^{2} \iint_j \frac{\Phi_j e^{-i\omega(t-R_j/c)}}{R_j^3} \left[1-\frac{i\omega R_j}{c}\right]\left[b-\gamma_j\right] dS_j = 0 \qquad (6)$$

$$\sum_{j=0}^{2} \iint_j \frac{\Phi_j e^{-i\omega(t-R_j/c)}}{R_j^3} \left[1-\frac{i\omega R_j}{c}\right]\left[a-\gamma_j\right] dS_j = 0 \qquad (7)$$

where

$$\gamma_0 = r_0 \cos(\theta-\theta_0), \quad \alpha_0=z$$

$$\gamma_1 = b \cos(\theta-\theta_1), \quad \alpha_1=-z_1 \qquad (8)$$

$$\gamma_2 = a \cos(\theta-\theta_2), \quad \alpha_2=-z_2$$

Note that the first integral in Equation (5) vanishes except at its singular point $R_0 = 0$. The integral may be evaluated and found to yield the finite contributions over the duct: $2\pi\Phi_0$ @ $R_0 = 0$; 0 @ $R_0 \neq 0$.

Equations (5), (6), and (7) constitute the integral equations to be used to determine the source strength distributions over the duct.

3.0 METHOD OF SOLUTION

The numerical technique chosen to solve Equations (5) through (7) is a "box-integration" method similar to that used in Reference 8. The method involves dividing the surface of the duct into a series of discrete areas and assuming that the source strength distribution over a given area or "box" is constant. The ϕ_j may then be taken out from under the integral sign and the integrals evaluated. By requiring that Equations (5), (6) and (7) be satisfied at a finite number of control points, a set of simultaneous linear algebraic equations are obtained for the unknown ϕ_j.

As the first step in solving the system of integral Equations (5) through (7), the fact that the desired source strength distributions must be single valued in angular dependence is utilized. Knowing the angular dependence of the modal velocity distributions in the duct to be of the form $\cos(m\theta)$, the ϕ_j are taken as:

$$\Phi_j(r_j, \theta_j, z_j) = \Phi_j(r_j, z_j)\cos(m\theta_j) \tag{9}$$

Thus by specifying the angular dependence of the ϕ_j, the number of control points is vastly reduced since now Equations (5) through (7) need be evaluated at only one angular position.

Next, divide the duct exit face into a series of M annular rings and the duct walls into N and N2 cylindrical segments as depicted in Figure 3.

Considering for the moment only Equation (5), segmentation yields the relation:

$$\begin{aligned}
&2\pi\Phi_0(r_0)\cos(m\theta_0)\,\delta(r-r_0, \theta-\theta_0) \\
&+\left\{\int_{z_1=-\infty}^{\xi}\int_{\theta_1=0}^{2\pi}\left[\text{Integrand}(z_1,\theta_1)\right]dS_1 + \cdots\right. \\
&\left.+\int_{\xi_N}^{0}\int_{\theta_1=0}^{2\pi}\left[\text{Integrand}(z_1,\theta_1)\right]dS_1\right\} \\
&+\left\{\int_{z_2=0}^{\eta}\int_{\theta=0}^{2\pi}\left[\text{Integrand}(z_2,\theta_2)\right]dS_2 + \cdots\right. \\
&\left.+\int_{z_2=\eta_{N2}}^{\infty}\int_{\theta_2=0}^{2\pi}\left[\text{Integrand}(z_2,\theta_2)\right]dS_2\right\} \\
&= V(r)\cos(m\theta)e^{-i\omega t}
\end{aligned} \tag{10}$$

PRECEDING PAGE BLANK NOT FILMED

where

$$\delta(r-r_0, \theta-\theta_0) = \begin{cases} 0 \text{ if } r \neq r_0 \text{ or } \theta \neq \theta_0 \\ 1 \text{ if } r = r_0 \text{ and } \theta = \theta_0 \end{cases}$$

Physical reasoning implies that

$$\lim_{z \to \infty} \Phi_1(z) = 0 \qquad (11)$$

$$\lim_{z \to \infty} \Phi_2(z) = 0$$

since the contribution of the sources on the duct exit plane to the vertical velocity on the duct wall at large distances becomes vanishingly small. This implies then that for practical purposes the integration boxes which extend to infinity may be neglected, that is, the integrations in the z directions may be truncated. Assume that the Φ_j are constant over each of their respective boxes so that:

$$\sum_{I=1}^{M} 2\pi \Phi_0(I) \cos(m\theta_0)\delta(r-r_I, \theta-\theta_0)$$
$$+ \sum_{J=1}^{N} \Phi_1(J) \int_{\Delta z_J} \int_{\theta_1=0}^{2\pi} [\text{Integrand}(z_1, \theta_1)] \cos(m\theta_1) dS_1 \qquad (12)$$
$$+ \sum_{J=1}^{N2} \Phi_2(J) \int_{\Delta z_J} \int_{\theta_2=0}^{2\pi} [\text{Integrand}(z_2, \theta_2)] \cos(m\theta_2) dS_2 = V(r) \cos(m\theta) e^{-i\omega t}$$

For the sake of computational expediency, the control points for Equation (12) and the equivalent forms of Equations (6) and (7), are chosen at $\theta = 0$, and at the center of the annular or cylindrical segments. Specifically, Equation (5) is satisfied at M points on the face of the duct, Equation (6) at N points on the outer duct wall, and Equation (7) at N2 points on the extended centerbody wall. By this procedure Equations (5), (6), and (7) become:

$$\begin{Bmatrix} V \\ \hline 0 \end{Bmatrix} = \left[\begin{array}{c|c} D & A \\ \hline B & C \end{array}\right] \begin{Bmatrix} \Phi_0 \\ \hline \Phi_1 \\ \Phi_2 \end{Bmatrix} \qquad (13)$$

where [D] is an M x M diagonal matrix whose elements are $D_{ii} = 2\pi$, i = 1, M,

[A] is an M x (N + N2) matrix,

[B] is an (N + N2) x M matrix,

and [C] is an (N + N2) x (N + N2) matrix

By expanding the partitioned matrix Equation (13), the unknown Φ_j's may be determined as:

$$\begin{Bmatrix} \Phi_1 \\ \Phi_2 \end{Bmatrix} = -\left[2\pi[C]-[B][A]\right]^{-1}[B]\{V\}$$

$$\{\Phi_0\} = \frac{1}{2\pi}\{V\} - \frac{1}{2\pi}[A]\begin{Bmatrix} \Phi_1 \\ \Phi_2 \end{Bmatrix} \tag{14}$$

A note on the method of integration used to obtain the elements of the coefficient matrices A, B, and C in Equation (14) is in order.

First of all, the annular and cylindrical segments of the duct are further subdivided into L angular regions. The integrals are then evaluated over each segment by using an even order Gaussian quadrature scheme. The order of the quadrature is increased by 2 and the integral values compared. If agreement is not obtained, the order is again increased and the procedure repeated until the integral value converges.

During development of the program difficulty in obtaining convergence was noted whenever the integration box was equal to or, in the case of small blocks, closely adjacent to a control box. This is a result of the singular nature of the integrals in Equations (5), (6) and (7) when $R_j = 0$, and is of concern since the number of arithmetic operations increases as the square of the order. For this reason, an approximate closed form solution for the integration on the outer duct walls for boxes centered on $\theta = 0^0$ was derived. The procedure is valid only if these boxes have an angular width, $\Delta\theta$ such that $\cos(m\Delta\theta) \approx 1$, thus restricting the size of these boxes. Under this assumption, the closed form value contributed by a control block to its own vertical velocity on the duct outer wall (or centerbody) is:

$$\Delta\theta\Phi_j \quad \text{for} \quad m = 0$$

$$\frac{2\sin\left(\frac{m\Delta\theta}{2}\right)}{m}\Phi_j \quad \text{for } m > 0$$

Also, the contribution of a control block on the outer duct wall (centerbody) to the vertical velocity on another control block on the outer duct wall (centerbody) is found to vanish. Figure 4 shows the allowable variation of $\Delta\theta$ with angular mode number for control boxes on the duct wall.

The only other integrations which have difficulty in converging are those which determine the contribution of control blocks on the face of the duct, to the vertical velocity at control blocks on the duct walls (and vice versa). This problem of nonconvergence exists only for the control blocks on the face of the duct which are near the intersections of the exit plane and the outer and inner walls. As closed form evaluations for these integrals have not yet been obtained, the only solution here is to allow higher quadrature orders, and to accept the increased computer time required for convergence.

4.0 RESULTS

4.1 Application

The numerical techniques developed in Section 3 are applied to a discrete frequency radiation problem by the following procedure. First, a mathematical representation of the inlet or exhaust duct is determined by selecting one of the three admissible configurations shown in Figure 1. Next the duct segmentation parameters are selected, (a detailed discussion of the proper selection of box breakdown is given in Appendix 1). Finally, the velocity distribution on the duct exit plane must be specified (hard or soft wall) since the acoustic modes are specified by their velocity distribution. For example, to analyze a duct radiation problem of discrete frequency noise emanating from a lined duct, the soft wall modes and their respective contributions to the radiated sound energy must be determined. Far field directivity patterns are determined for each mode and then combined to yield the total noise signature. In the event both an inlet and fan duct are to be modeled, their respective far field directivity patterns can be calculated and then combined to determine the total noise signature of the nacelle.

Several examples of applying the program to each of the three admissible duct configurations shown in Figure 1 are presented. The resulting source distributions and directivity patterns are used to evaluate the utility and accuracy of the program. For each example problem presented the frequency and outside duct radius were chosen to ensure that only the plane wave mode would propagate down the infinitely long duct. Values of the acoustic and duct segmentation parameters are presented in Table 4.1.

TABLE 4.1
TABULATION OF ACOUSTIC AND DUCT SEGMENTATION PARAMETERS

PROBLEM	FREQUENCY PARAMETER kb	RADIUS RATIO a/b	SEGMENTATION PARAMETERS EXIT PLANE	OUTER WALL	CENTERBODY WALL	INTEGRATION LIMIT
1	1.0	0.0	16	40	0	4.1
2	1.0	0.5	16	40	0	4.1
3	1.0	0.5	10	10	10	1.375
4	1.0	0.5	10	20	20	2.6

Example Problem 1

Noise radiating from a nacelle inlet is represented by a circular duct configuration. The resulting source distributions on the duct exit plane Φ_0, and outer duct wall Φ_1, are presented in Figures 5 and 9 respectively. To illustrate the behavior of Φ_0 and Φ_1, two

plots of each source distribution are presented. The smaller plot is a duplicate of the large one for an expanded scale. Note the extremely large slope of these distributions near the lip of the duct. This behavior which is due to the discontinuity in the velocity distribution, is discussed in detail in Appendix 1. Aside from the singularity near the duct lip, the behavior of the outer wall source distribution, Φ_1, along the duct wall is important. For a proper box breakdown, Φ_1 should exhibit a strong decay near the duct lip with small amplitude oscillations along the remainder of the duct. A normalized directivity pattern is shown on a polar plot in Figure 15. This pattern is compared with the results obtained by a numerical calculation based on the closed form solution given by Lansing, Reference 4.

Example Problem 2

The program was applied to an annular duct configuration to determine the effect of a centerbody on the far field directivity pattern. Source distributions for the duct exit plane and the outer duct wall are presented in Figures 6 and 10 respectively. The discontinuity in the source distribution on the duct exit plane at r/b = 0.5 is due to the discontinuity in the velocity at the inner duct wall. A comparison of the resulting normalized directivity pattern shown in Figure 16 and the normalized pattern of the circular duct shows the effect of the inner duct wall on the far field radiation.

Example Problem 3

Noise radiating from a nacelle fan duct is modeled by extending the inner centerbody past the duct exit plane. Source distributions for the duct exit plane, outer duct wall and extended centerbody wall are shown in Figures 7, 11, and 13 respectively. Singularities in the exit plane source distribution occur near the extended centerbody wall as well as near the outer lip of the duct. The extended centerbody source distribution Φ_2 exhibits several large oscillations before decaying. The effect of the extended centerbody wall on the normalized directivity pattern is shown in Figure 17 to modify the circular duct pattern near the 90° region.

Example Problem 4

The annular duct with an extended centerbody is modeled with a different box breakdown than that used in Problem 3. The box breakdown of the extended centerbody wall was refined near the duct exit plane and additional boxes on the centerbody carried the integration farther back on the wall. Source distributions for the duct exit plane, outer duct wall and extended centerbody wall are shown in Figures 8, 12 and 14. The directivity pattern of Figure 18 shows the effect of modifying the box breakdown on the duct. Finer breakdown yields a pattern that is closer to circular duct pattern than was observed in the coarse breakdown of Example Problem 3.

4.2 Limitations

There are several limitations to this program. First, mean flow within the duct has been neglected. Although application of this analysis to a nacelle radiation problem does not yield an exact model, it is anticipated that this simplification will not significantly affect

results for noise propagation through a locally subsonic flow field of an inlet. However, radiation through an exhaust or jet flow will not be represented properly by the present analysis.

The second limitation to the program is restriction of the specified velocity distribution on the face of the duct to a Cos ($m\theta$) type of angular dependence. This assumption does not affect the capability of the program to combine different m angular modes in the far field by superposition of the source distributions, Reference 10. It does, however, restrict the Duct Termination Impedance Program, Reference 11 to the extent that for a velocity distribution whose angular dependence is specified by a combination of different m angular modes a separate analysis must be made for each set of angular modes.

The most restrictive limitation to the program at present is one of required storage size and corresponding computer time. Both of these digital computer usage parameters are related to the wavelength of the radiated sound waves. To adequately represent the spatial variation of the source strength distribution over the duct, there should be at least two boxes per wavelength (6 boxes per wavelength is more desirable). In order that the far-field behavior at angles greater than 140 degrees be adequately represented, it is necessary that the integration on the duct outer wall extend back farther as frequency increases. Together these two requirements indicate that at higher frequencies, a very large number of small boxes are required.

Time and storage requirements depend on the number of integrations required to fill the influence matrix in Equation (13). The number of integrations varies with the square of the number of boxes and computer run time is dependent on the number of integrations. When convergence of the numerical quadratures becomes a problem the program requires a considerably larger amount of time to compute the matrix elements. Core storage required by the computer is equal to twice the square of total number of boxes, since the matrix elements are complex numbers. The number of boxes required on the exit plane of the duct becomes critical when radiation patterns of high radial modes are desired. At least two boxes per zero crossing of the velocity distribution is required, (i.e. the 6th radial mode requires at least 12 boxes. A similar problem involves the requirement for a very high number of angular boxes when applying the program to the problem of high angular modes. This requirement increases the computer run time since the number of numerical quadratures is greater.

5.0 CONCLUSIONS AND RECOMMENDATIONS

An acoustic radiation analysis has been developed that predicts the angular distribution of acoustic energy in the far field that is radiated from an unflanged duct. This analysis represents a rather unique analytical tool in that it can be applied to hard wall ducts (unlined) with an annular cross-section as well as circular. Both circular and annular duct configurations with their interior walls lined with noise suppression material can be analyzed. For all duct configurations with either hard or soft walls, the far field radiation patterns are corrected for the impedance mismatch at the duct exit plane. Also, of primary importance is the fact that the present analysis permits combination of inlet and exhaust radiation patterns in the far-field.

In spite of its many advantages, this acoustic radiation analysis is limited in its range of application. For this reason, this analysis has been relegated to the role of a first generation analysis in a commitment to develop an analytical package which will predict radiation characteristics of a turbofan jet engine. The present version of the analysis reaches optimum efficiency when it is applied to low frequency noise radiating from an infinite duct. This and other limitations due to a Cos ($m\theta$) type of angular dependence of the velocity distribution and the required storage size and corresponding computer time are an inherent property of the "box method" numerical technique.

A second generation version of the program could avoid these limitations by utilizing a collocation technique of evaluating the integrals. The primary feature of this technique is that a selected analytical expression is used to represent the source distribution. The time saving feature of the collocation technique is that it requires fewer evaluations of the integrals. The collocation procedure would enable the analysis to handle any combination of angular modes, a result which would remove the angular modal coupling limitation for the Impedance Program, Reference 11, and eliminate the need for a large number of angular boxes.

In addition to the collocation procedure, a second generation version of the analysis should contain a method of accounting for a mean flow within the duct. This method should account for the effects of velocity gradients on the distortion of the radiation field by the jet.

A further refinement in the overall development of an analysis to predict turbofan noise would be the incorporation of a finite length duct representation. This change is not a simple extension to the present program due to certain inherent mathematical problems that involve the nonexistence of solutions of the integral equation formulation. As discussed in Reference 12, these problems can be avoided by using an alternate formulation.

A finite duct length representation would require additional analytical considerations. The presence of higher radial modes generated at the duct termination and reflected back toward the source could not be ignored. Their reaction with the noise source and subsequent propagation down the duct towards the exit plane requires that the problem must be analyzed by a systems analysis approach.

PRECEDING PAGE BLANK NOT FILMED

6.0 REFERENCES

1. Levine, H. and Schwinger, J., "On the Radiation from an Unflanged Circular Pipe," Phys. Review, Vol. 73, No. 4, February 15, 1948, pp 383-406.

2. Carrier, G. F., "Sound Transmission from a Tube with Flow," Quarterly Appl. Math, Vol. XIII, No. 4, January 1956, pp 457-461.

3. Vajnshtejn, L. A., "Propagation in Semi-Infinite Waveguides, IV., The Theory of Sound Waves in Open Tubes," Res. Rep. No. EM-63, Inst. Math. Science, New York University, (Transl. by J. Shmoys), January 1954, pp 87-116.

4. Lansing, D. L., Drischler, J. A., and Pusey, C. G., "Radiation of Sound from an Unflanged Duct with Flow," Paper presented at the 79th Meeting of the Acoustical Society of America, Atlantic City, N. J., April 21-24, 1970.

5. Morfey, C. L., "Rotating Pressure Patterns in Ducts: Their Generation and Transmission," J. Sound. Vib., 1964, I, pp 60-87.

6. Morfey, C. L., "A Note on the Radiation Efficiency of Acoustic Duct Modes," J. Sound Vib., 1969, g(3), pp 367-372.

7. Tyler, J. M., and Sofrin, T. G., "Axial Flow Compressor Noise Studies," 1961 SAE Aeronautic Meeting, preprint 345D.

8. Chen, L. H., and Schweikert, D. G., "Sound Radiation from an Arbitrary Body" Journal of the Acoustical Society of America, Volume 35, No. 10, 1963, pp 1626-1632.

9. Martenson, A. J., and Liu, H. K., "Optimum Lining Configurations," NASA SP-207, 1969, pp 425-434.

10. Beckemeyer, R., and Sawdy, D., "Acoustic Radiation from Lined Unflanged Ducts – Directivity Index Program," NASA CR 120850, December 1971.

11. Beckemeyer, R., and Sawdy, D., "Acoustic Radiation from Lined Unflanged Duct Termination Impedance Program," NASA CR 120851, December 1971.

12. Copley, L. G., "Fundamental Results Concerning Integral Representations in Acoustic Radiation," Journal of Acoustical Society of America, Volume 44, No. 1, 1968, pp 28-32.

PRECEDING PAGE BLANK NOT FILMED

7.0 FIGURES

PRECEDING PAGE BLANK NOT FILMED

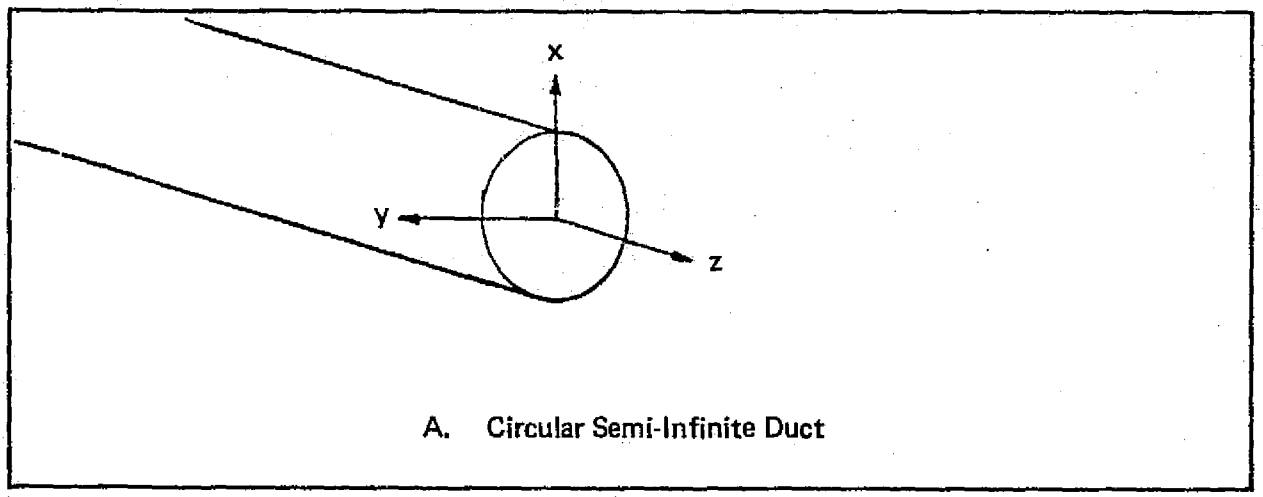

A. Circular Semi-Infinite Duct

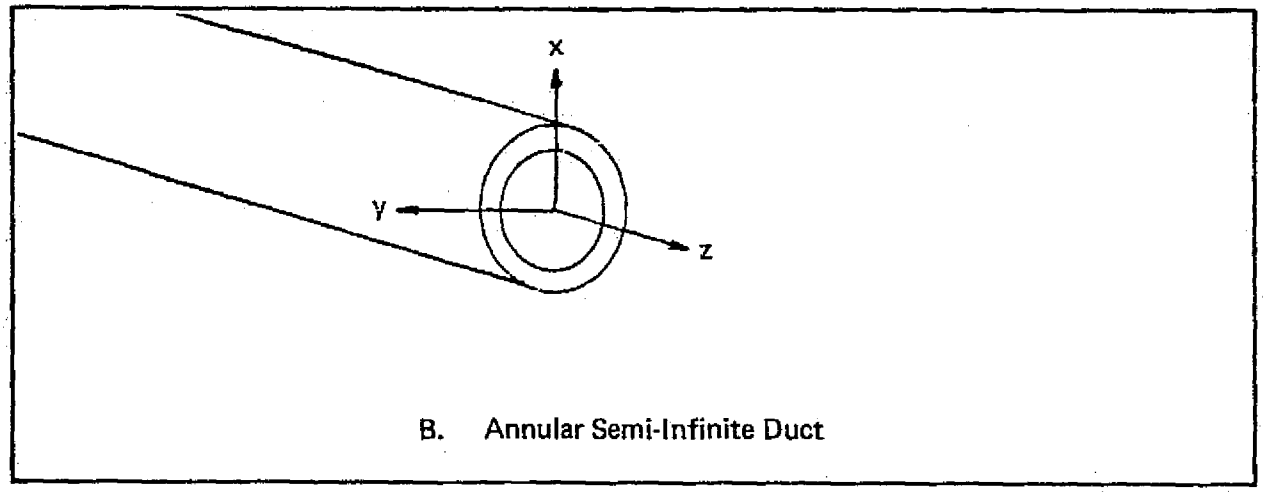

B. Annular Semi-Infinite Duct

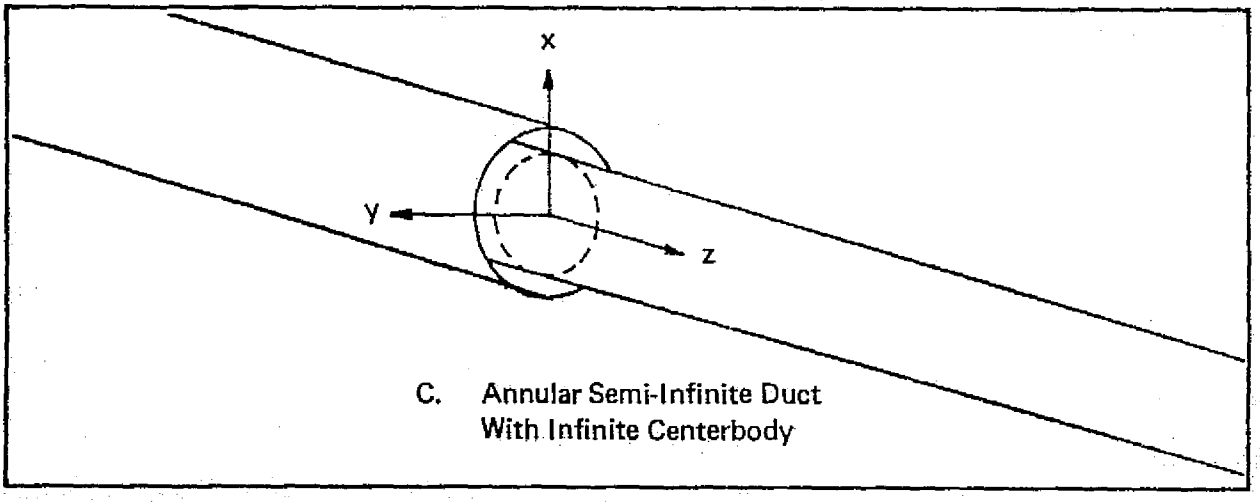

C. Annular Semi-Infinite Duct
With Infinite Centerbody

ADMISSABLE DUCT CONFIGURATIONS
FIGURE 1

PRECEDING PAGE BLANK NOT FILMED

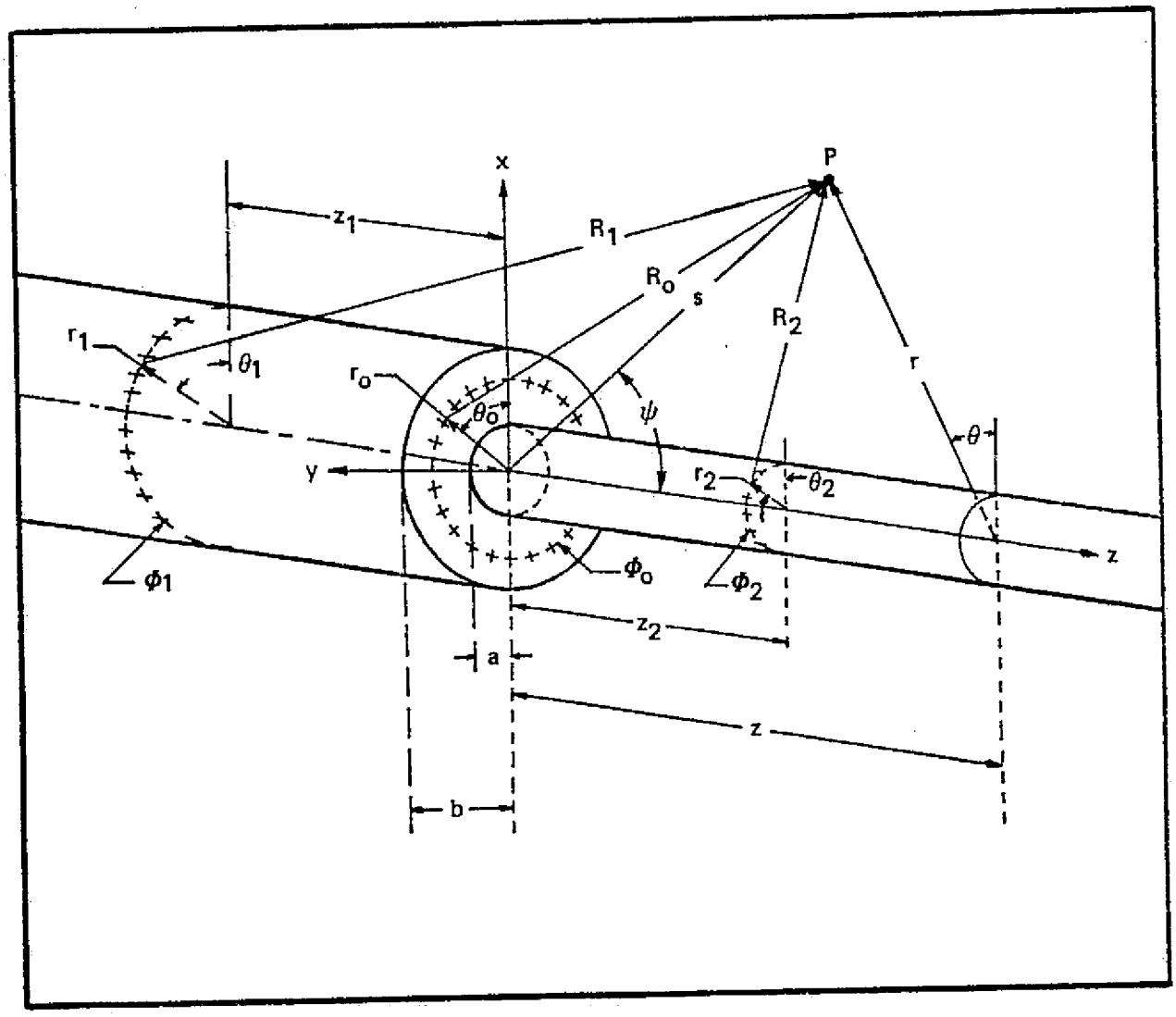

GEOMETRY
FIGURE 2

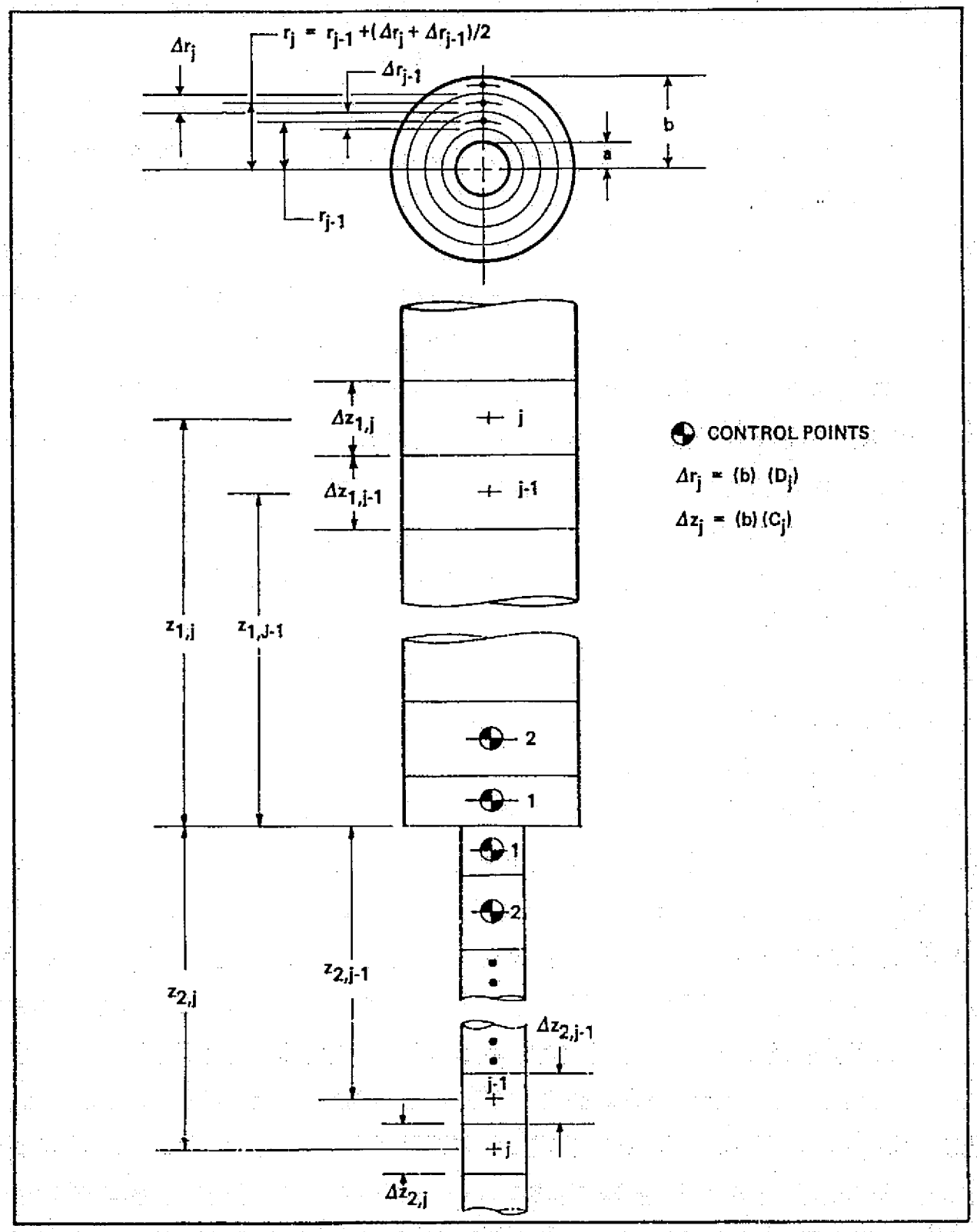

DUCT BREAKDOWN
FIGURE 3

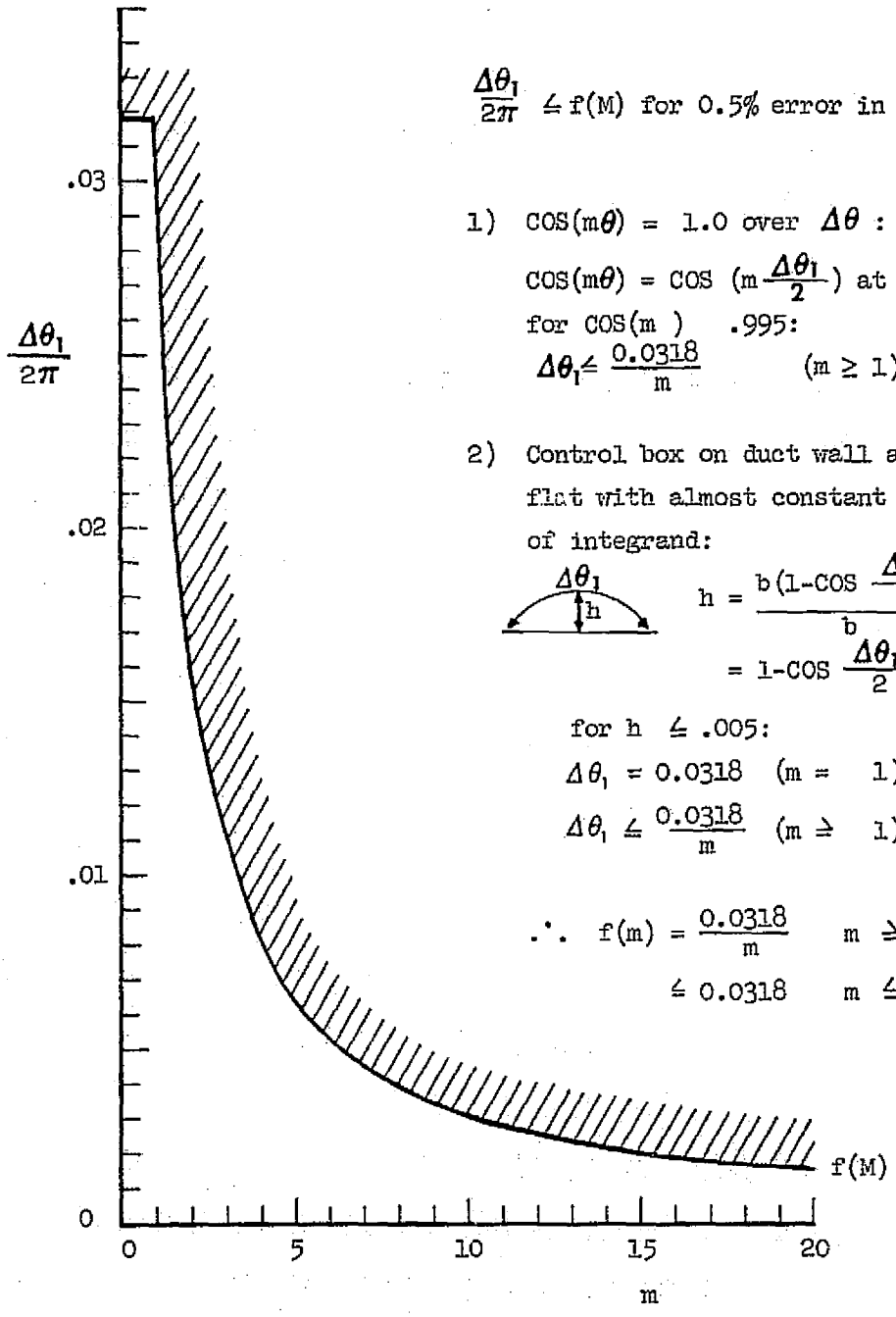

$\frac{\Delta\theta_1}{2\pi} \leq f(M)$ for 0.5% error in approximations.

1) $\cos(m\theta) = 1.0$ over $\Delta\theta$:

$\cos(m\theta) = \cos\left(m\frac{\Delta\theta_1}{2}\right)$ at end of $\Delta\theta_1$ block

for $\cos(m\ )$ .995:

$\Delta\theta_1 \leq \frac{0.0318}{m} \qquad (m \geq 1)$

2) Control box on duct wall approximately flat with almost constant θ dependence of integrand:

$$h = \frac{b\left(1-\cos\frac{\Delta\theta_1}{2}\right)}{b}$$

$$= 1-\cos\frac{\Delta\theta_1}{2}$$

for $h \leq .005$:

$\Delta\theta_1 = 0.0318 \quad (m = 1)$

$\Delta\theta_1 \leq \frac{0.0318}{m} \quad (m \geq 1)$

$\therefore \quad f(m) = \frac{0.0318}{m} \qquad m \geq 1$

$\leq 0.0318 \qquad m \leq 1$

CONTROL BOX ANGULAR SIZE
FIGURE 4

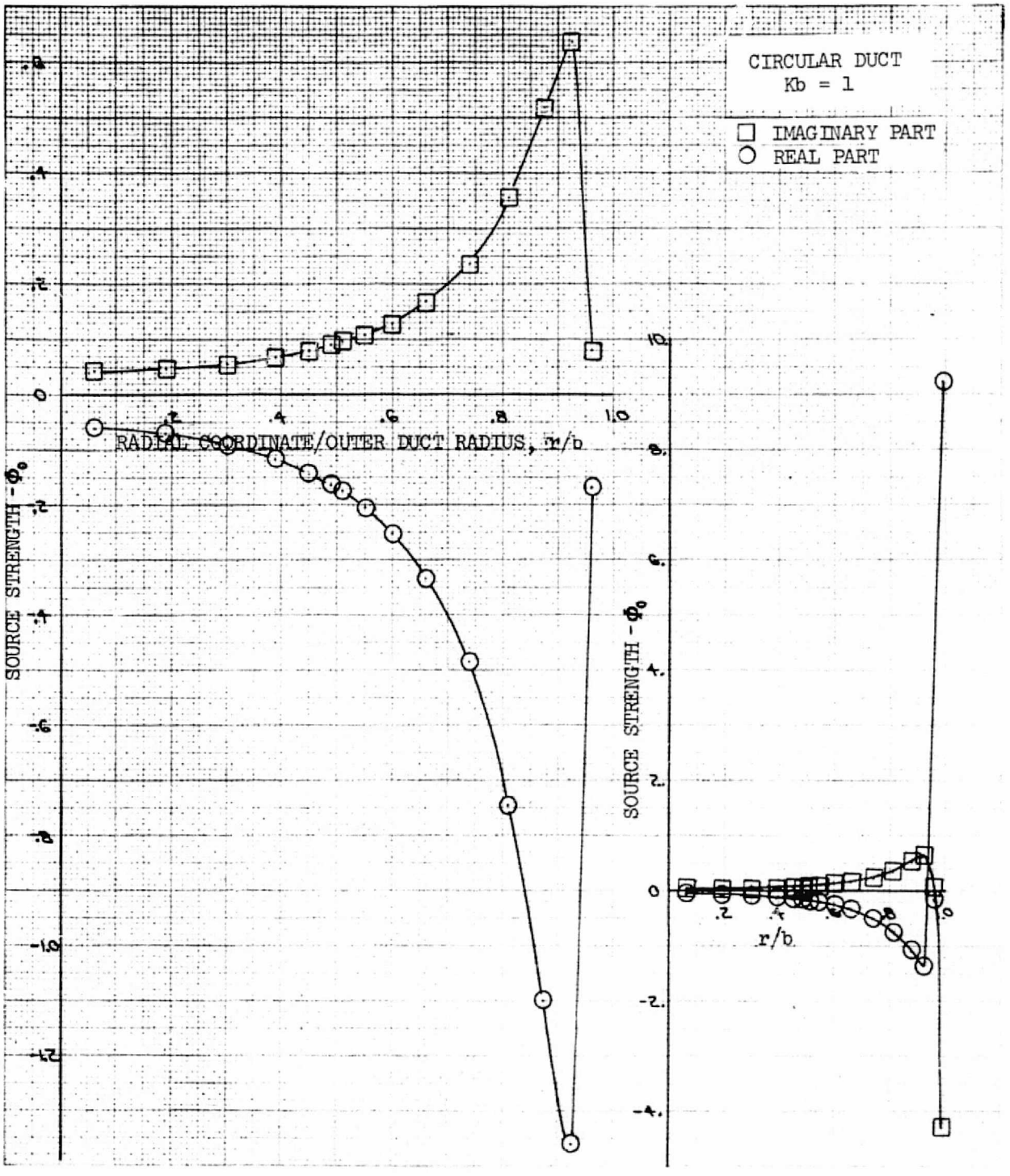

SOURCE STRENGTH DISTRIBUTION – PROBLEM 1 – ϕ_0
FIGURE 5

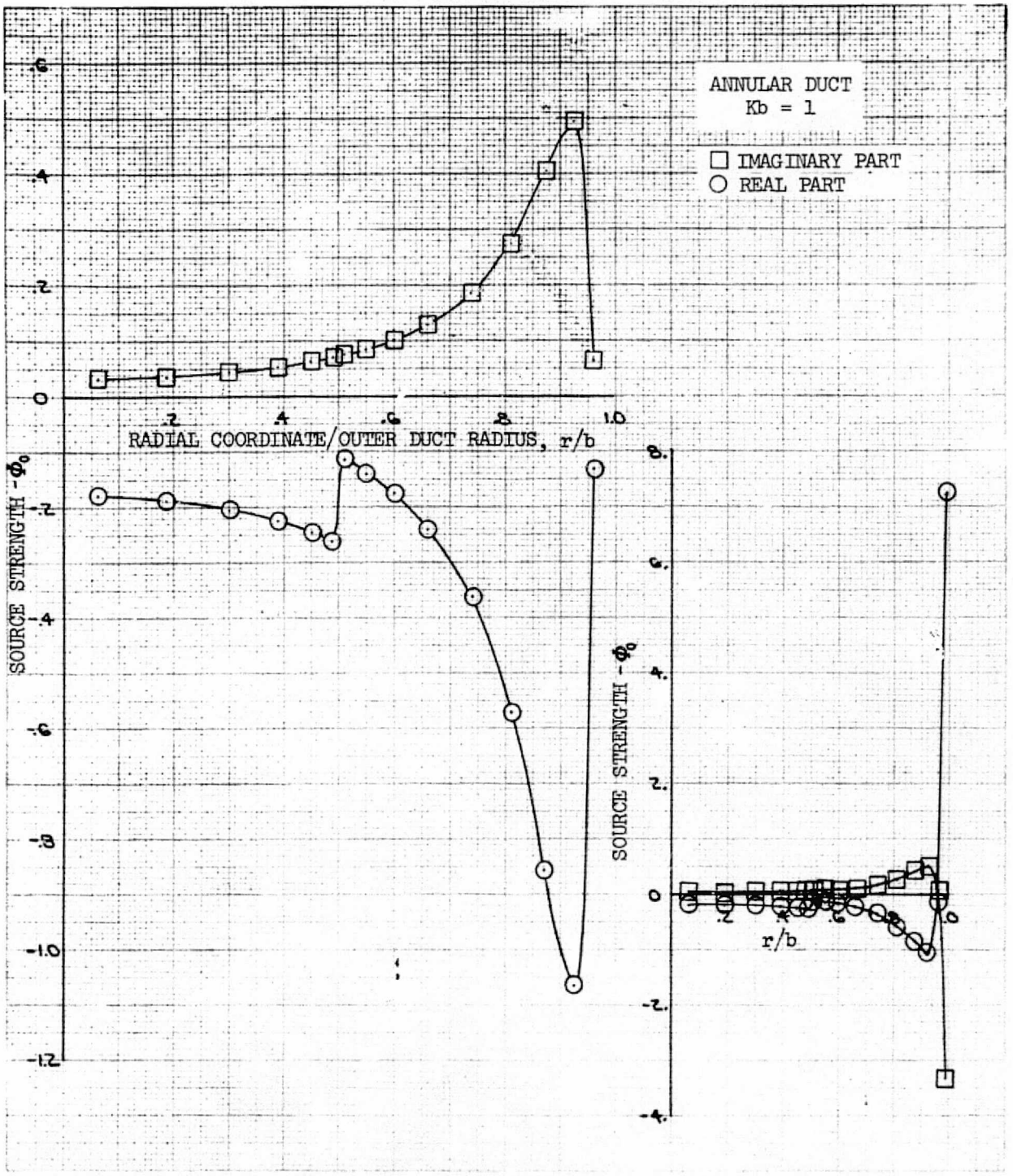

SOURCE STRENGTH DISTRIBUTION – PROBLEM 2 – ϕ_0
FIGURE 6

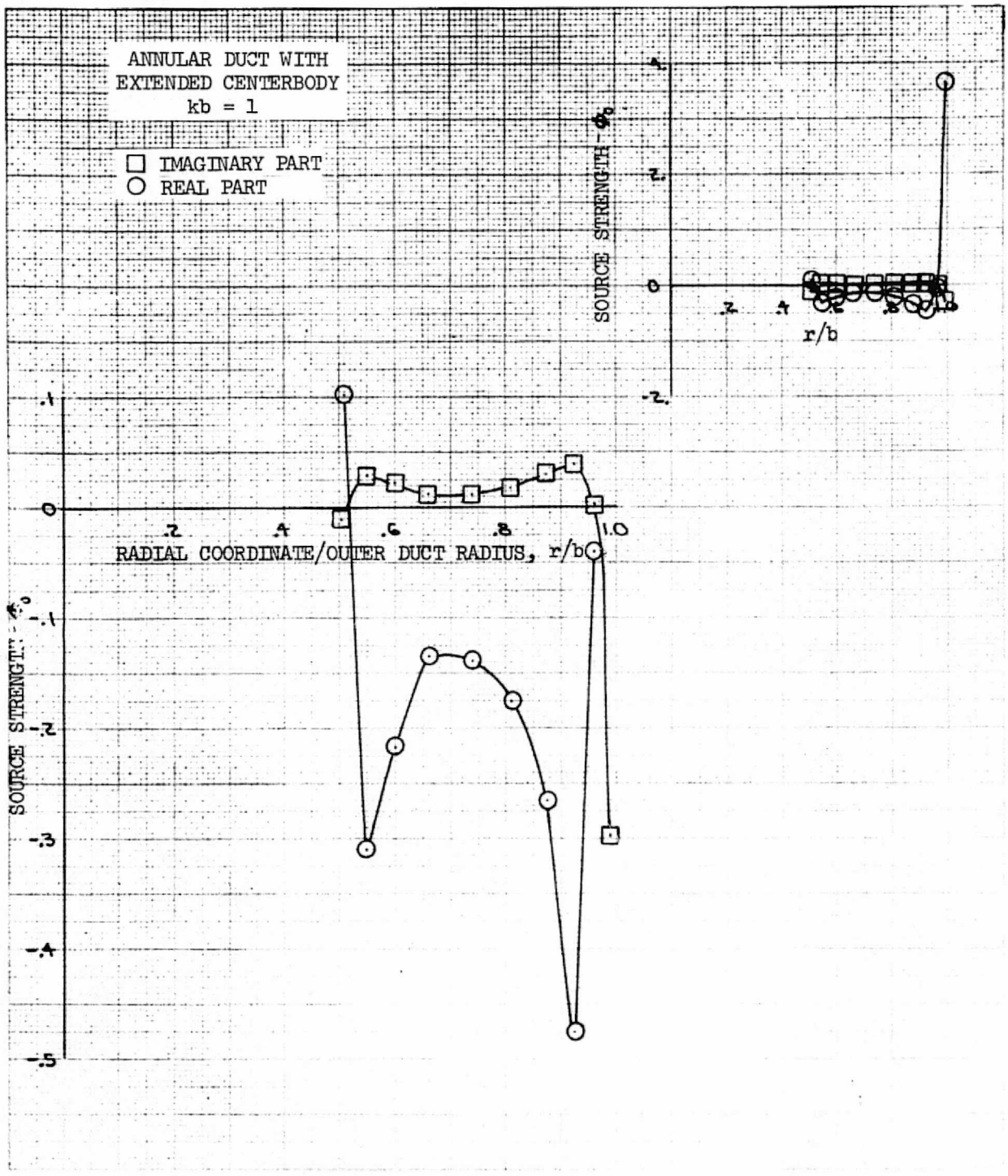

SOURCE STRENGTH DISTRIBUTION – PROBLEM 3 – Φ_0
FIGURE 7

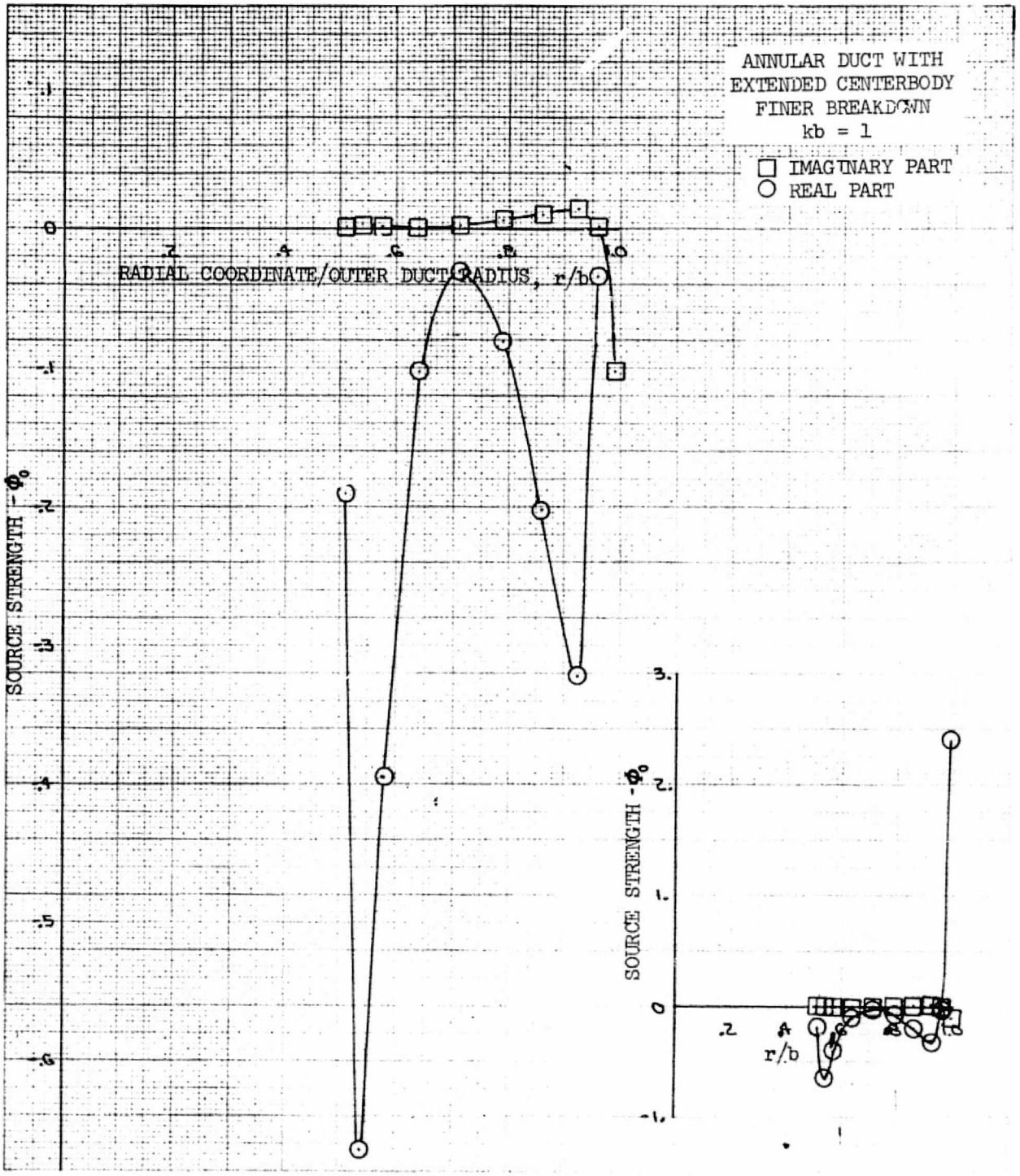

SOURCE STRENGTH DISTRIBUTION – PROBLEM 4 – Φ_0
FIGURE 8

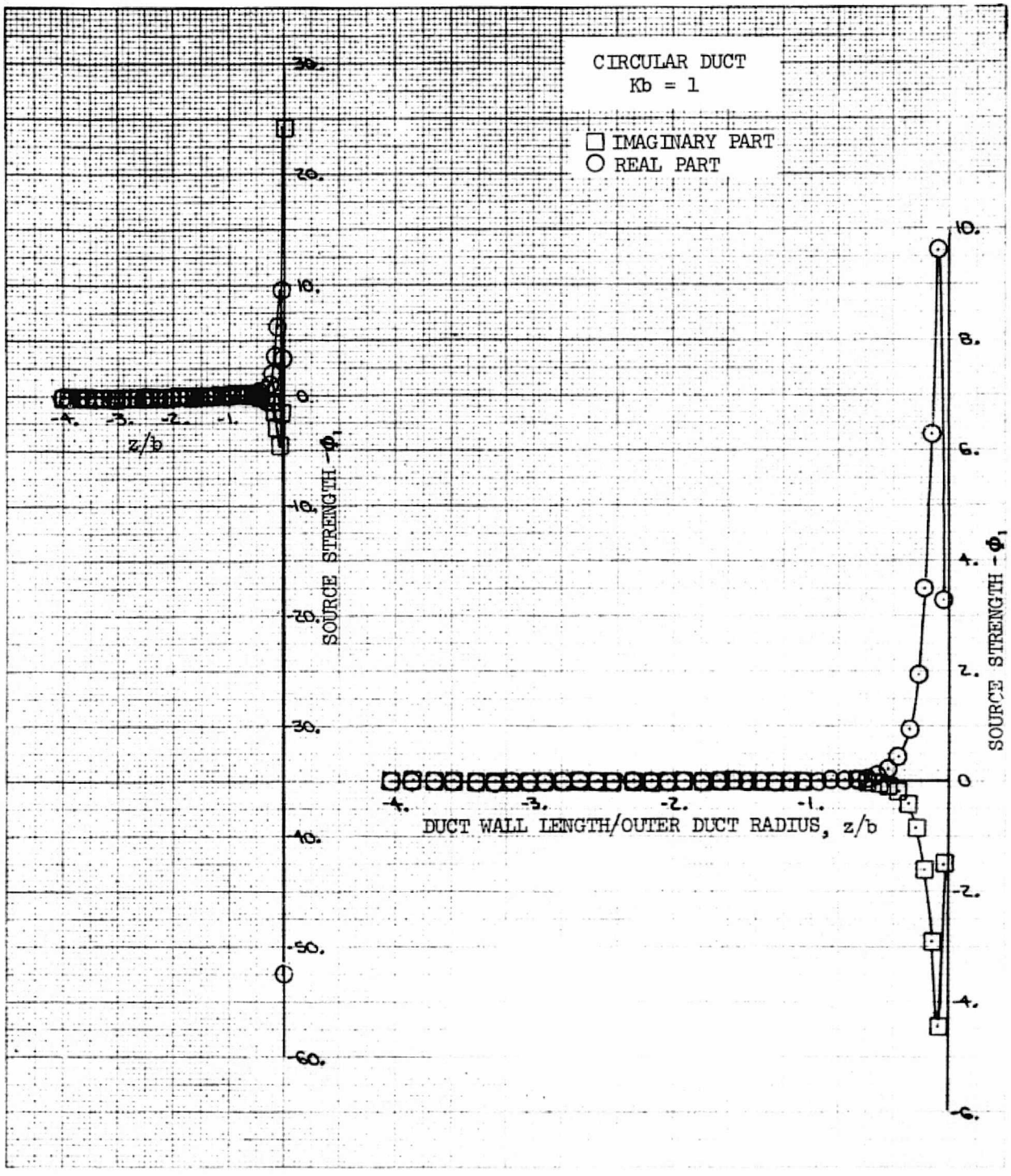

SOURCE STRENGTH DISTRIBUTION – PROBLEM 1 – ϕ_1
FIGURE 9

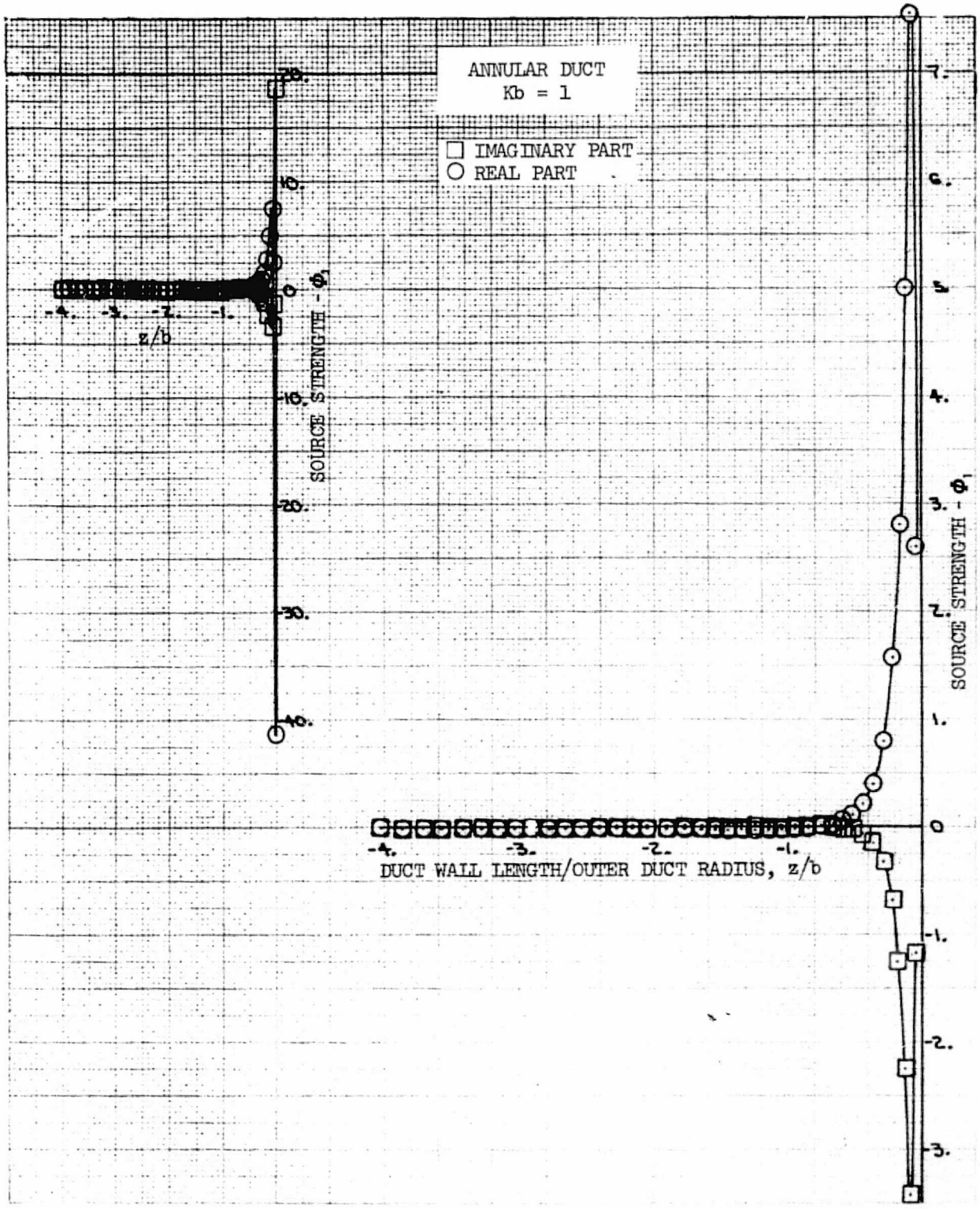

SOURCE STRENGTH DISTRIBUTION – PROBLEM 2 – ϕ_1
FIGURE 10

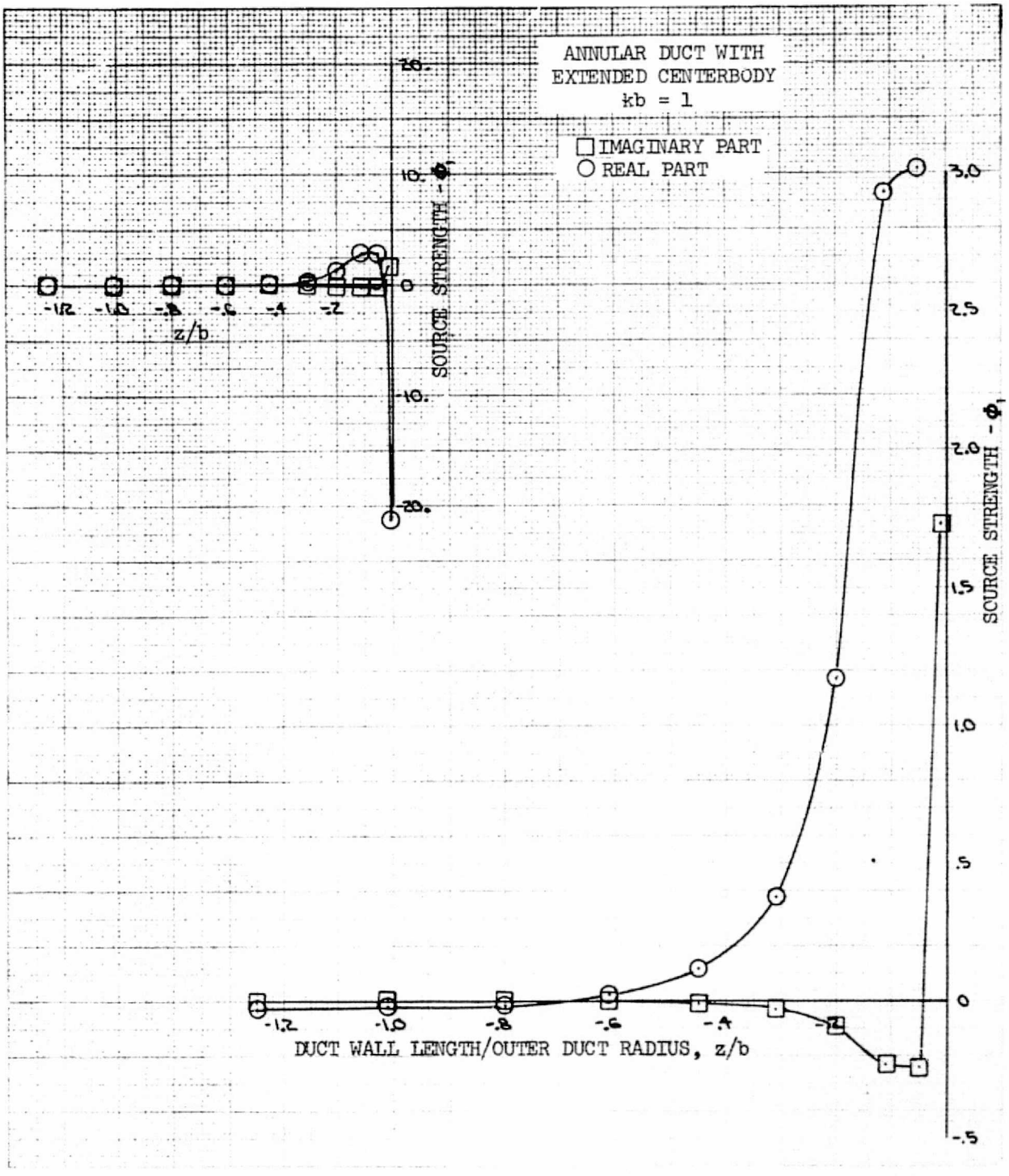

SOURCE STRENGTH DISTRIBUTION – PROBLEM 3 – Φ_1
FIGURE 11

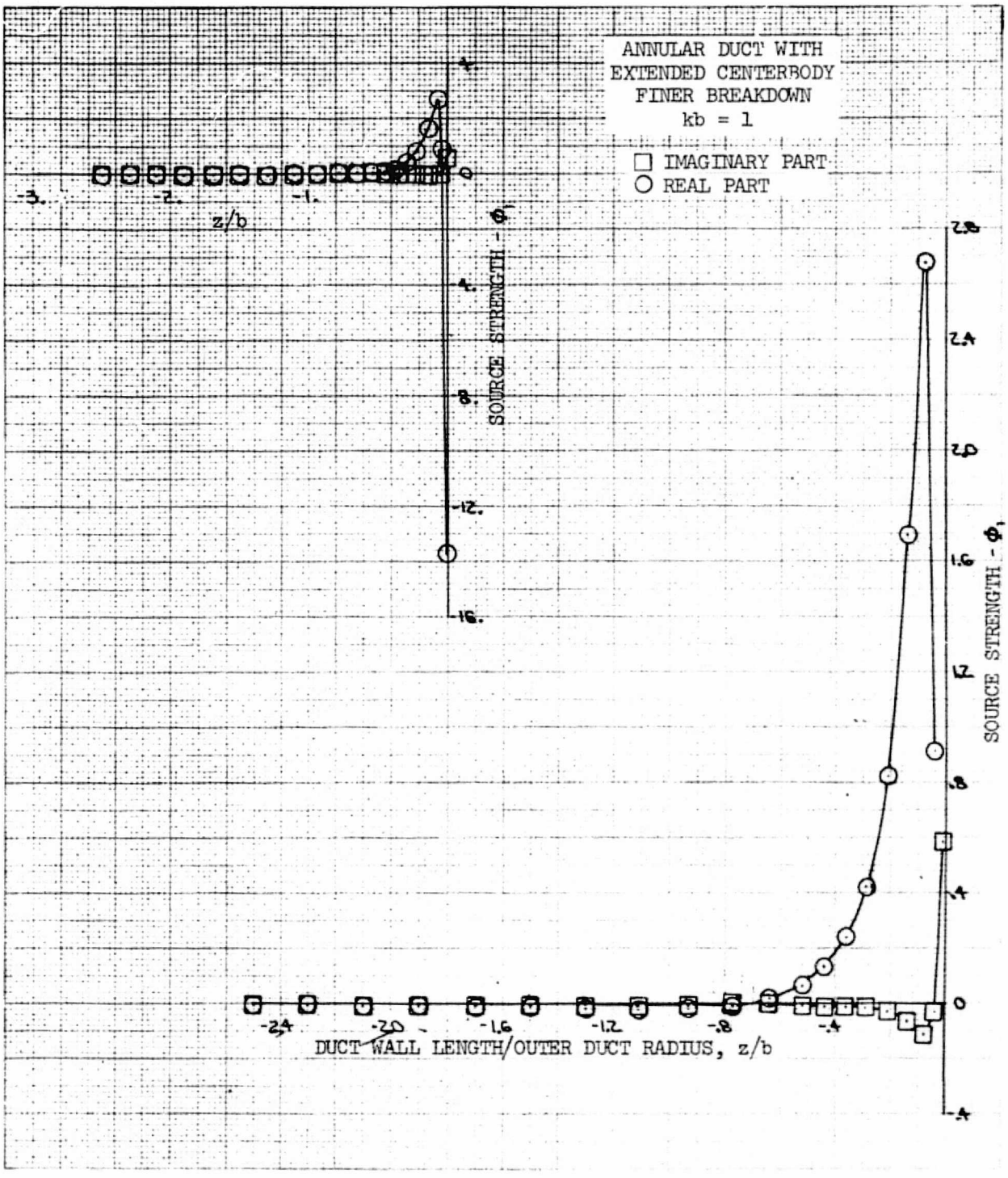

SOURCE STRENGTH DISTRIBUTION – PROBLEM 4 – Φ_1
FIGURE 12

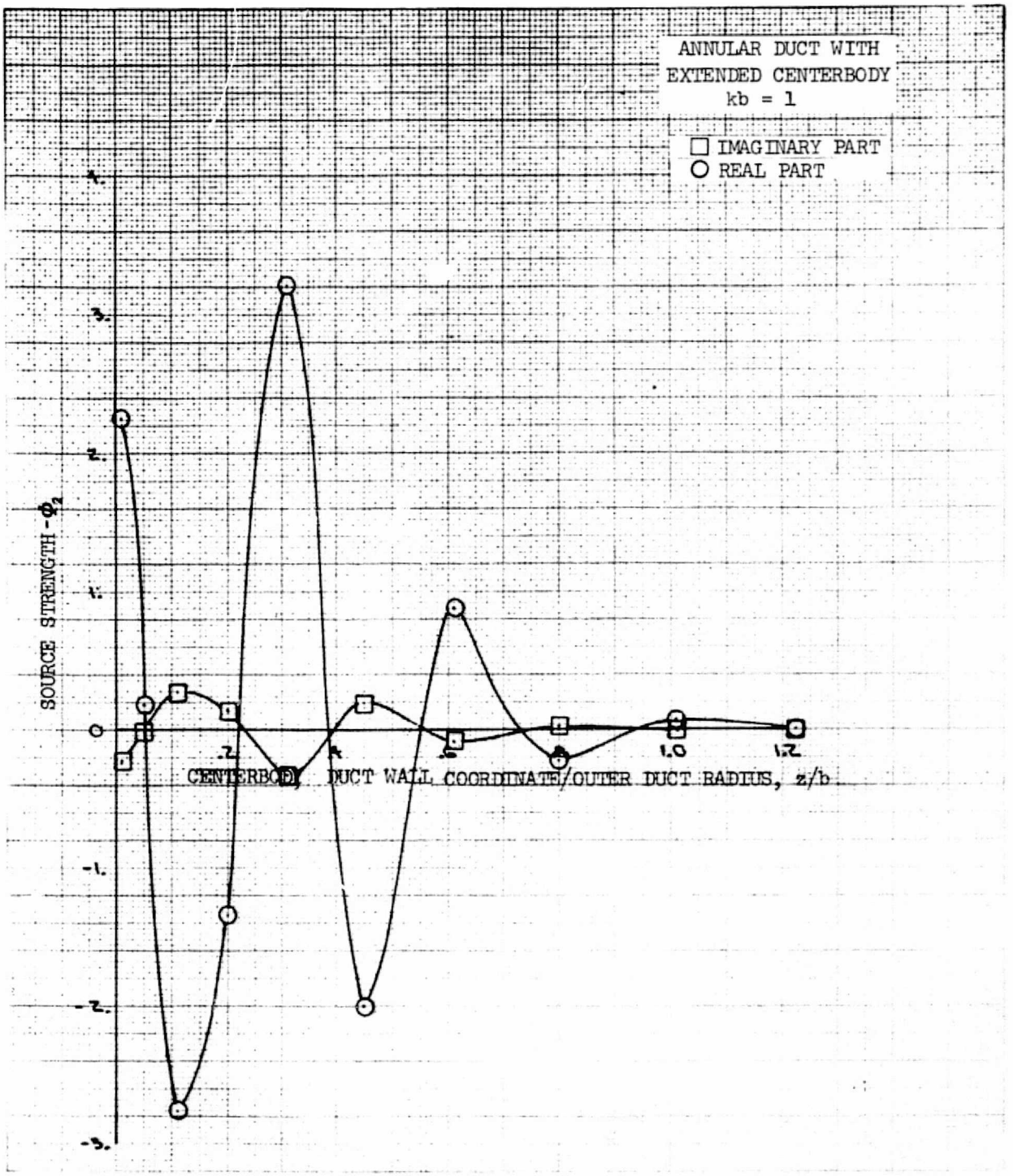

SOURCE STRENGTH DISTRIBUTION – PROBLEM 3 – Φ_2
FIGURE 13

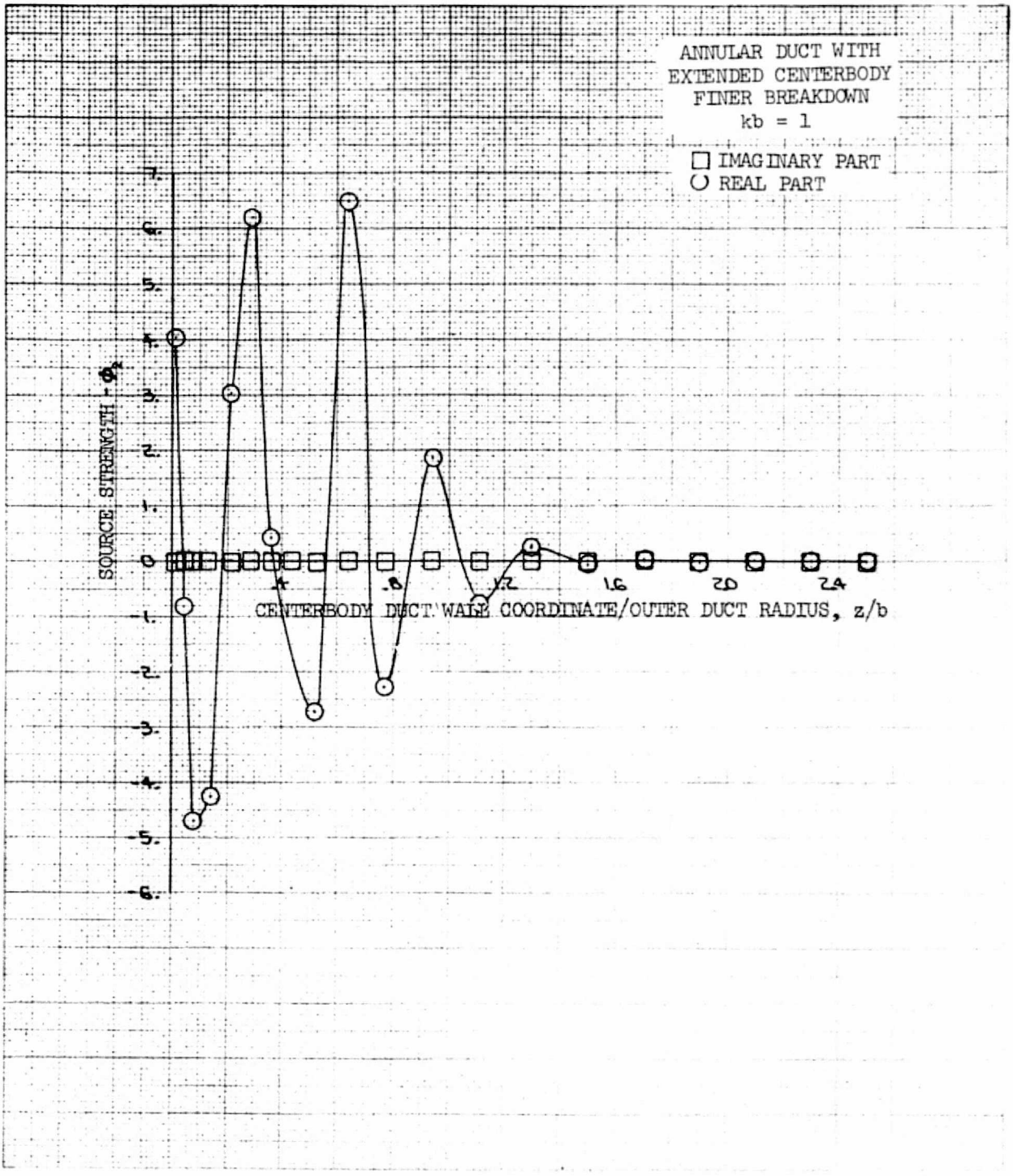

SOURCE STRENGTH DISTRIBUTION – PROBLEM 4 – Φ_2
FIGURE 14

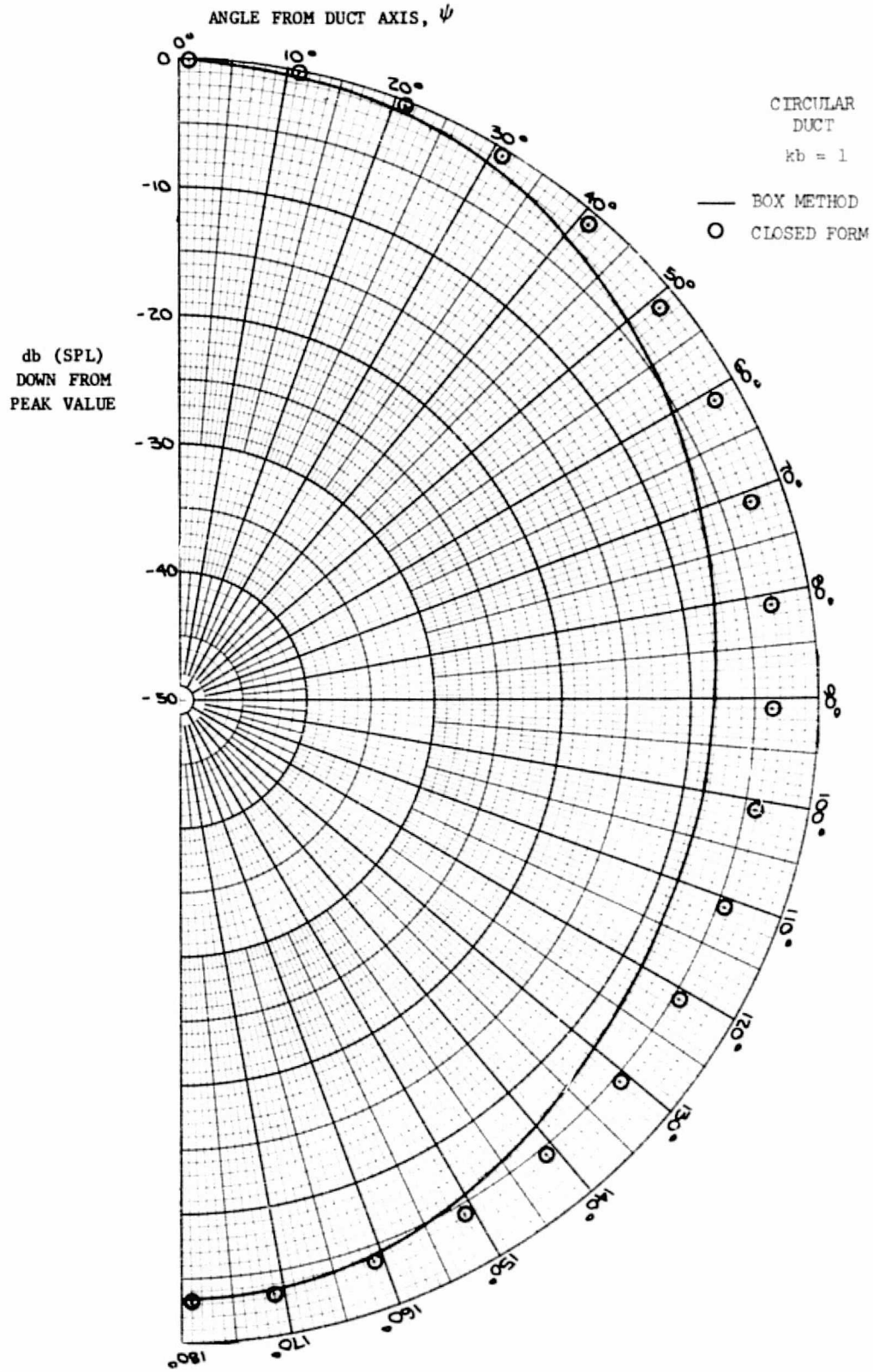

NORMALIZED DIRECTIVITY PATTERN – PROBLEM 1
FIGURE 15

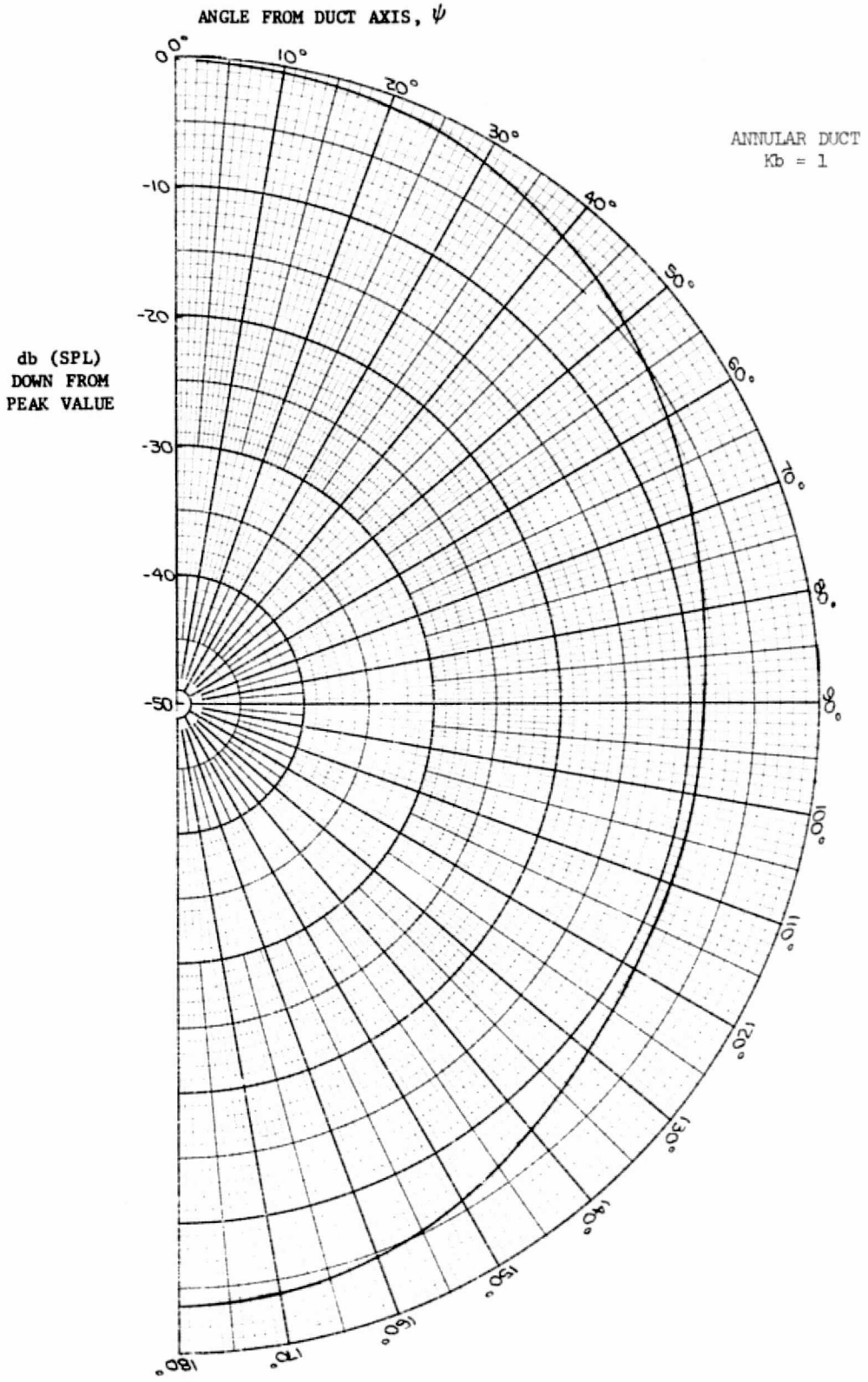

NORMALIZED DIRECTIVITY PATTERN – PROBLEM 2
FIGURE 16

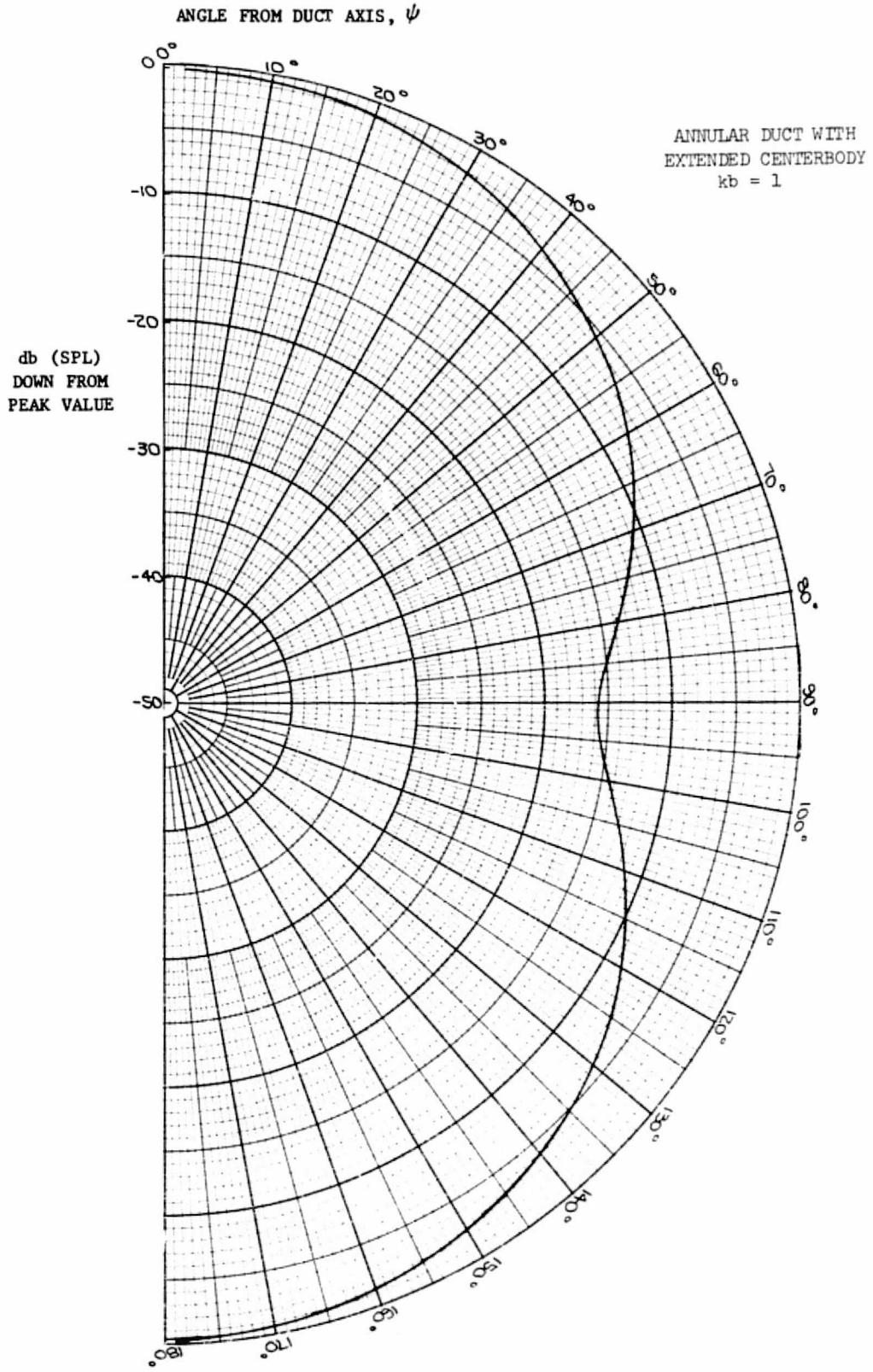

NORMALIZED DIRECTIVITY PATTERN – PROBLEM 3
FIGURE 17

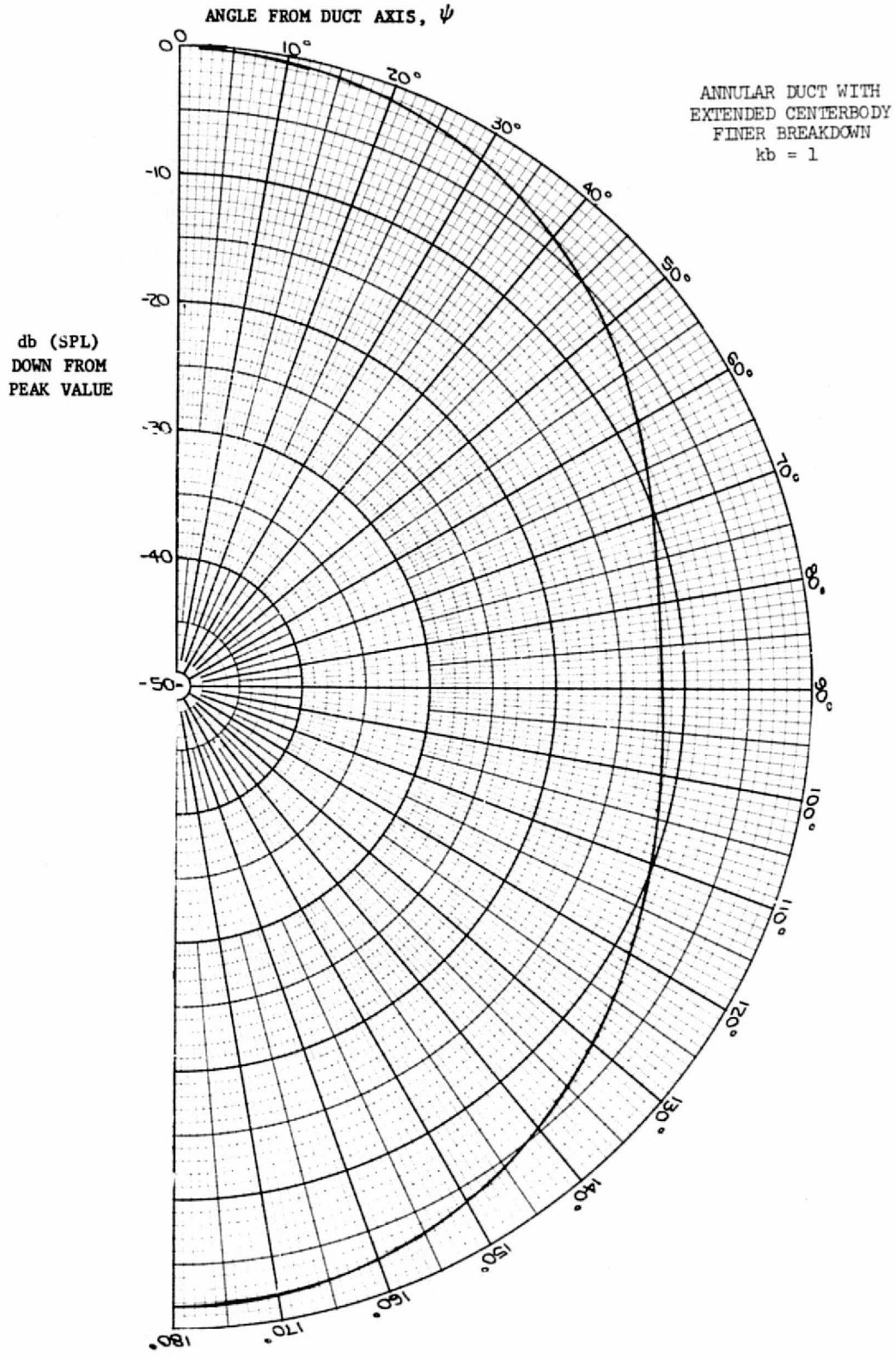

NORMALIZED DIRECTIVITY PATTERN – PROBLEM 4
FIGURE 18

APPENDIX 1

PROGRAM DESCRIPTION

NOMENCLATURE

Computer Program Variables

A	Centerbody Radius
AA(I,J)	Matrix
B	Outer Duct Radius
BB(I,J)	Matrix
C(I)	Dimensionless Size of Ith Box on Duct Outer Wall
C2(I)	Dimensionless Size of Ith Box on Extended Centerbody Wall
CHK	Convergence Criterion
DD(I,J)	Matrix
D(I)	Dimensionless Size of Ith Box on Duct Exit Face
INK	Configuration Parameter
IV	No. of Velocity Distributions to be Read In
K	No. of Polar Angles at which Far Field Data is Required
L	No. of Angular Boxes
MW	Angular Mode No.
M	No. of Annular Boxes
N	No. of Cylindrical Boxes on Duct Wall
N2	No. of Cylindrical Boxes on Extended Centerbody Wall
NNZ	No. of Velocities to be Computed by VELINT
PHI(I)	Source Strength Distribution
R	Radial Coordinate
RO,RI	Distance Between Point on Duct and Field Point
S	Sound Speed in Air
TT	Angular Coordinate
TI	Angular Coordinate Integration Variable
V(I)	Velocity Distribution on Exit Face
W	Frequency Radians/Second
WDS	Wavenumber W/S
XANG	Nondimensional Angular Size for Control Box
ZZ	Axial Coordinate

INPUT DATA

Since the accuracy of the source strength distribution obtained from this program is critically dependent on the method of segmentation of the duct walls and exit face, a brief discussion of the pertinent points is in order. In addition to the requirements that the control boxes have a small angular width such that $\text{Cos}(m\Delta\theta)\approx 1.0$ and that there be two or more boxes per wavelength of the radiated sound, there are restrictions on the size of the annular and cylindrical segment heights (Δr and Δz, respectively) in the region of the intersection of the duct walls and the exit plane. This requirement must be satisfied, primarily, to accurately compute the near field pressure (over the duct exit face).

The discontinuous velocity along this intersection results in the Φ_j's being singular there. (An inner asymptotic expansion of the wave equation near the intersection has revealed that the singularity is one in slope of the Φ_j versus z or r curves. Specifically, as the intersection is approached, the Φ_j behave as $|x|\ell n|x|$, x going to zero, where ℓn denotes the natural logarithm.)

Adequate representation of this singular behaviour requires a fine breakdown in the region of the intersection. For a duct of radius b, the breakdown near the intersection should consist of several boxes ranging in size from 0.01b up to 0.05b. For all duct configurations the fine breakdown would be necessary near the duct lip on both the face and the wall. For an annular duct it is also necessary on the face on both sides of the inner annulus wall, whereas for the annular duct with an extended centerbody, the fine segmentation is necessary on the face and centerbody wall near their intersection.

As a final note, the box sizes on the face in both the radial and angular directions must naturally decrease in size when higher order modes with many modal lines are represented.

CARD OR CARD SET	FORMAT	DATA
1	18A4	Title of run
2	NAMELIST	Logical Parameters: PUNCH = T(F) yields (does not yield) punched card output to be used in the directivity index program. OLD = T(F) bypasses (does not bypass) the integration loops and uses (does not use) previously generated matrices in the MATX program to compute PHI distributions for new velocities. Delete card (sets) 3 through 7 if OLD = T.
3	3012	Integer Parameters: L = No. of Angular Segements M = No. of Annular Segments N = No. of Cylindrical Segments NN = Order of Initial Gauss Quadrature (NN Even) LP = No. of Integrations in Integration Routine MW = Angular Mode Number INK = Configuration Parameter (0 - Circular or Annular Duct, 1 - Annular Duct with Extended Centerbody)

		K = No. of Angles at which Far Field Pressure Values are to be computed. N2 = No. of Cylindrical Segments on Centerbody.
4	7F10.3	A = Centerbody Radius (A = 0.0 for Circular or Annular Ducts) B = Outer Radius of Main Duct W = Frequency, Radians/Second S = Sound Speed in Units Consistent with those of A & B CHK = Convergence Criterion for Numerical Integration XANG - Nondimensional Angular Size for Control Box $\Delta\theta$ Radians = 2π (XANG) (See Figure 4).
5 (Card Set-N Values, 7 Per Card)	7F10.3	C(I), I = 1, N, the size of the cylindrical segments on the Main Duct Wall in the Z direction, Nondimensionalized with respect to B, Numbered with C(1) closest to the duct exit plane and I increasing in the negative Z direction.
6 (Card Set-N2 Values, 7 Per Card)	7F10.3	C2(I), I = 1, N2 Input this set only if INK = 1. Size of cylindrical segments on centerbody wall in Z direction, nondimensionalized with respect to B, numbered with C2(1) closest to the duct exit plane and I increasing in the positive Z direction.
7 (Card Set-M Values, 7 Per Card)	7F10.3	D(I), I = 1, M, the size of the annular segments on the duct exit plane in the radial direction, nondimensionalized with respect to B, Numbered D (1) at the duct centerline (or adjacent to the centerbody wall-duct exit plane intersection) and increasing to D(M) at the lip of the duct.
8	2I2	IV IV 0, IV = No. of velocity distributions to be read from cards. IV = 0, velocity distributions to be computed as hard-wall modal distributions from VELINT.
9 (Card Set-M Complex No's. 3 Per Card	6E12.5	V(I), I = 1, M, Velocity* distribution on face of duct V(K) = velocity corresponding to segment D(K). - Input this card set only if IV>0.
10	3612	NNZ - No. of Velocity Distribution to be computed by VELINT. Input Card 10 only if IV = 0.

*NOTE: For annular duct without extended centerbody, the velocity for the boxes on the inner annular area must be set equal to zero.

PROGRAM FLOW

Flow charts for the box method program and associated subroutines are given in Appendix 2.

The main program consists of the calling program and subroutines CAL200, CAL300 and CAL700. Here the input data are read in and the box method integrations performed. Upon completion of the integration, subroutine MATX is called. This subroutine carries out the matrix manipulations required to solve for the source strength distributions.

Subroutine GAUSS is used in the integration and consists of tables of Gaussian weights and abscissas. Subroutine INVT performs the inversion of complex matrices. Subroutine VELINT is an optional routine which computes modal velocity distributions for hard walled annular ducts. Thus, the velocity distributions may be input directly or computed by VELINT.

OUTPUT

Output quantities consist of the following:

A. Input data printout

B. Results of the integration program, consisting of the contribution of each box to the vertical velocity at each control point.

C. Results of the matrix operations during which the Φ_j's are computed. (Optional)

D. The values of the source strengths at each box.

EXAMPLE PROBLEMS

Appendix 8 illustrates the input preparation and output format of the program. A listing of the input data are given for each example problem discussed in Section 4.1. Complete printout (with the exception of the operations performed by MATX) is shown for example Problem 1.

APPENDIX 2

PROGRAM FLOW CHARTS

PRECEDING PAGE BLANK NOT FILMED

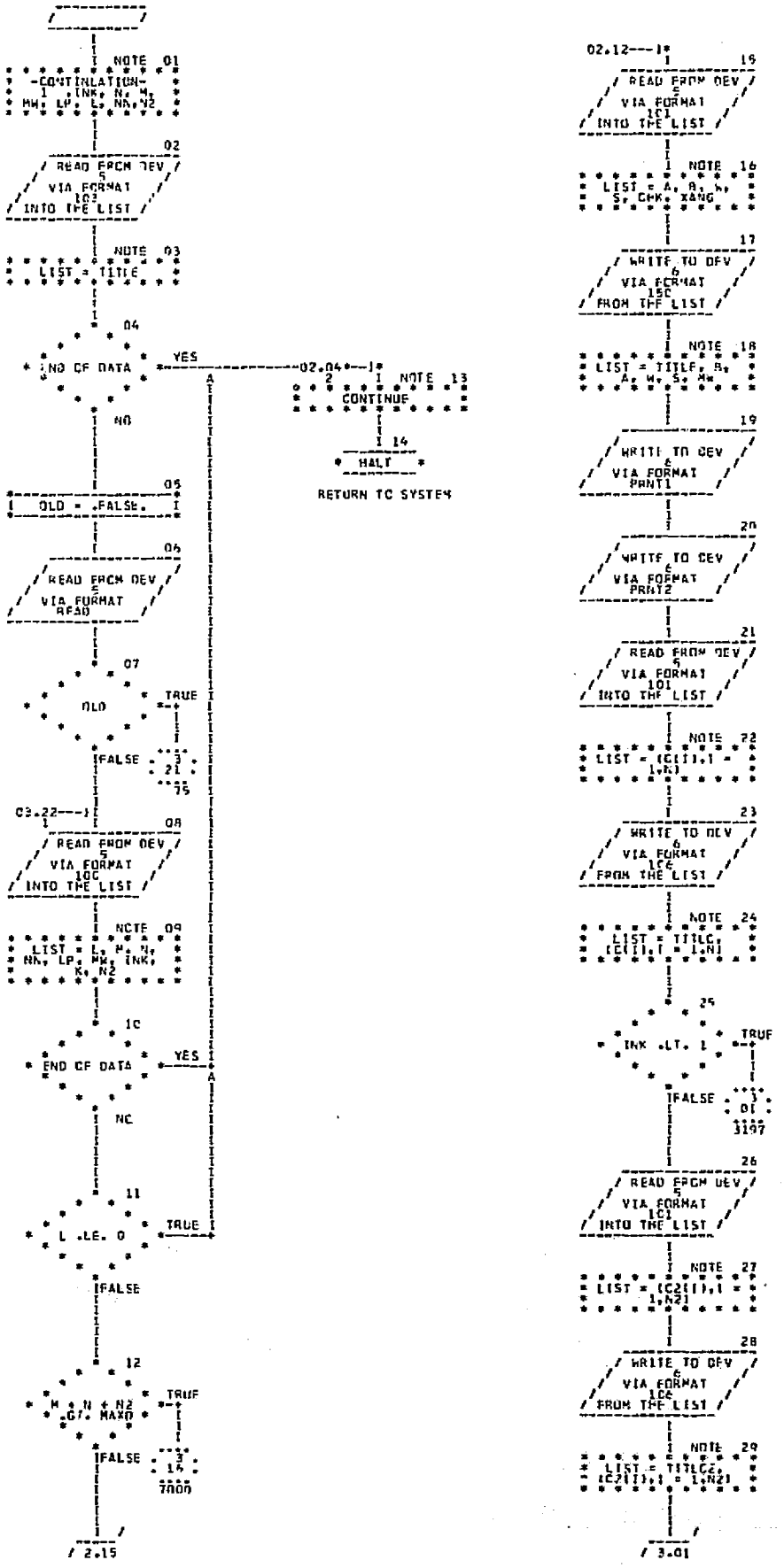
NOTE 01
-COMTINLATION-
INK, N, M,
MM, LP, L, NN, N2
02
READ FROM DEV
5
VIA FORMAT
103
INTO THE LIST
NOTE 03
LIST = TITLE
04
END OF DATA
YES
NO
02.04---1
2 1 NOTE 13
CONTINUE
14
HALT
RETURN TO SYSTEM
05
OLD = .FALSE.
06
READ FROM DEV
5
VIA FORMAT
READ
07
OLD
TRUE
FALSE
3
21
75
03.22---1
08
READ FROM DEV
5
VIA FORMAT
10C
INTO THE LIST
NOTE 09
LIST = L, M, N,
NN, LP, MM, INK,
K, N2
10
END OF DATA
YES
NO
11
L .LE. 0
TRUE
FALSE
12
M * N + N2
.GT. MAXD
TRUE
FALSE
3
14
7000
2.15
02.12---1
1 16
READ FROM DEV
5
VIA FORMAT
1C1
INTO THE LIST
NOTE 16
LIST = A, B, H,
S, CHK, XANG
17
WRITE TO DEV
6
VIA FORMAT
15C
FROM THE LIST
NOTE 18
LIST = TITLE, B,
A, W, S, MM
19
WRITE TO DEV
6
VIA FORMAT
PRNT1
20
WRITE TO DEV
6
VIA FORMAT
PRNT2
21
READ FROM DEV
5
VIA FORMAT
101
INTO THE LIST
NOTE 22
LIST = (C(I),I =
1,N)
23
WRITE TO DEV
6
VIA FORMAT
1C6
FROM THE LIST
NOTE 24
LIST = TITLC,
(C(I),I = 1,N)
25
INK .LT. 1
TRUE
FALSE
1
01
3197
26
READ FROM DEV
5
VIA FORMAT
1C1
INTO THE LIST
NOTE 27
LIST = (C2(I),I =
1,N2)
28
WRITE TO DEV
6
VIA FORMAT
1C6
FROM THE LIST
NOTE 29
LIST = TITLC2,
(C2(I),I = 1,N2)
3.01

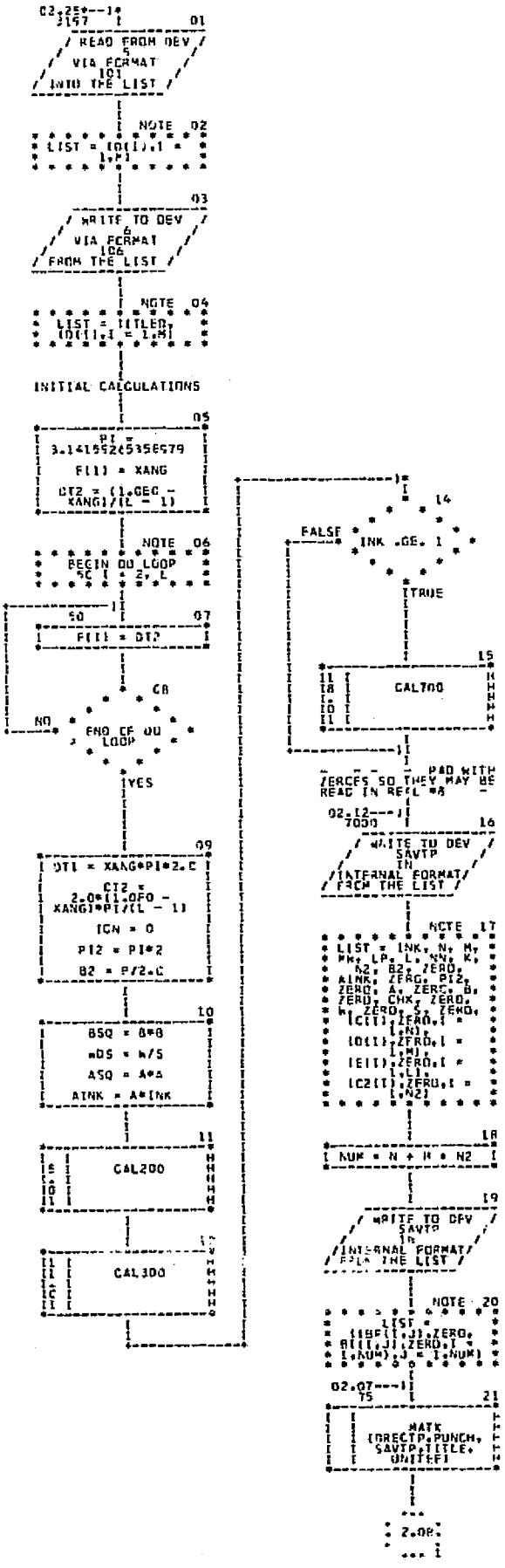
READ FROM DEV 5 VIA FORMAT 101 INTO THE LIST
NOTE 02
LIST = (D(I),I = 1,P1)
WRITE TO DEV 6 VIA FORMAT 106 FROM THE LIST
NOTE 04
LIST = TITLED, (D(I),I = 1,M)
INITIAL CALCULATIONS
PI = 3.14159265358979
F(1) = XANG
DT2 = (1.0EC - XANG)/(L - 1)
NOTE 06
BEGIN DO LOOP SC I = 2, L
SO
F(I) = DT2
CR
END OF DO LOOP
NO
YES
DT1 = XANG*PI*2.C
CT2 = 2.0*(1.0FO - XANG)*PI/(L - 1)
ICN = 0
PI2 = PI*2
B2 = P/2.C
BSQ = B*B
WDS = W/S
ASQ = A*A
AINK = A*INK
CAL200
CAL300
FALSE
INK .GE. 1
TRUE
CAL700
PAD WITH ZEROES SO THEY MAY BE READ IN REAL *8
WRITE TO DEV SAVTP IN INTERNAL FORMAT FROM THE LIST
NOTE 17
LIST = INK, N, M, MK, LP, L, NN, K, N2, B2, ZERO, AINK, ZERO, PI2, ZERO, A, ZERO, B, ZERO, CHX, ZERO, ZERO, ZERO, S, ZERO, (C(I),ZERO,I = I,N), (D(I),ZERO,I = I,M), (E(I),ZERO,I = I,L), (C2(I),ZERO,I = I,N2)
NUM = N + M + N2
WRITE TO DEV SAVTP IN INTERNAL FORMAT FROM THE LIST
NOTE 20
LIST = ((BF(I,J),ZERO, B(I,J),ZERO,I = I,NUM),J = I,NUM)
MAIN (DIRECTP,PUNCH, SAVTP,TITLE, UNITEF)
2.08

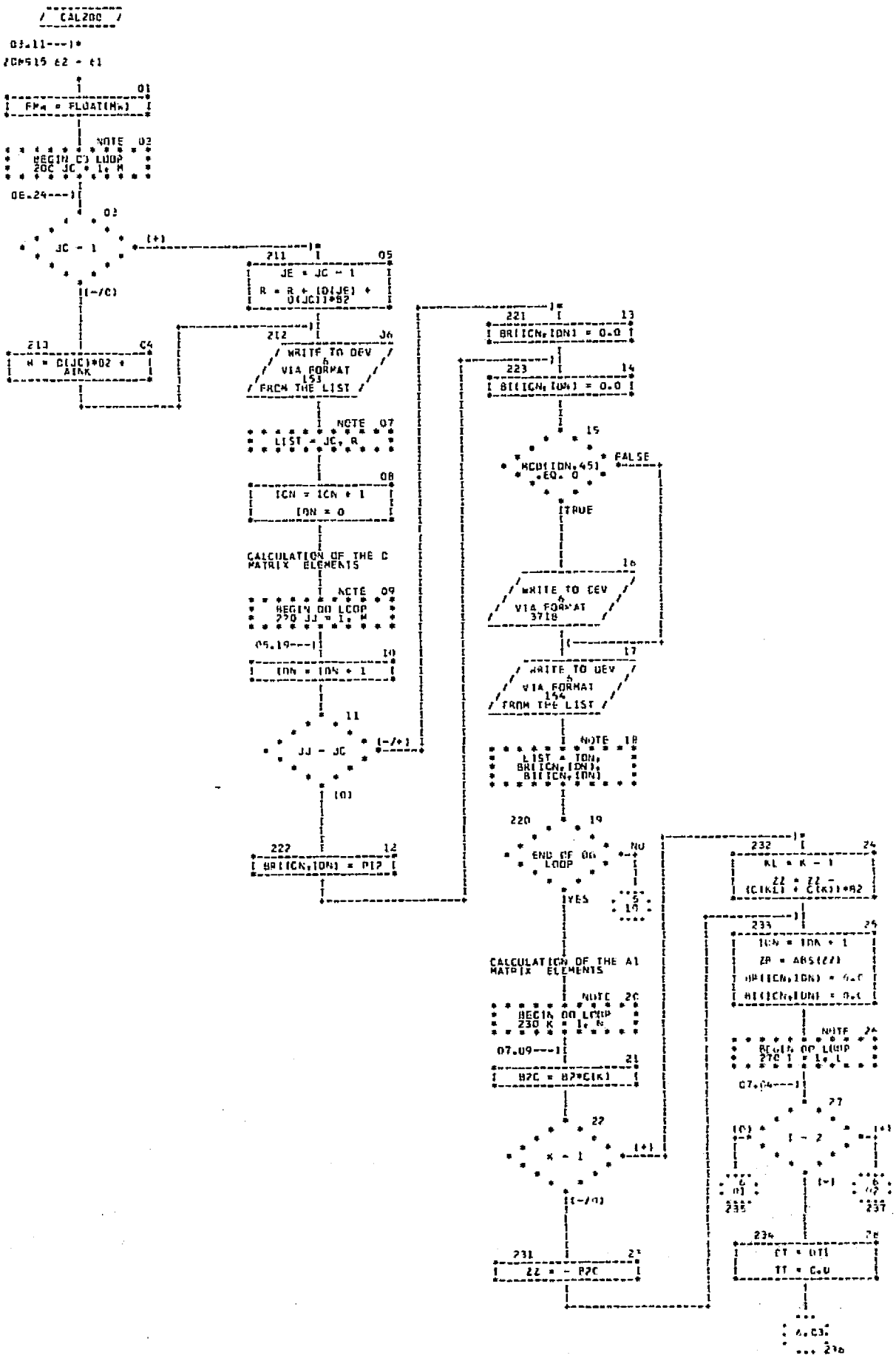
CAL200
FMW = FLOAT(MW)
NOTE 02
BEGIN DO LOOP 200 JC = 1, M
JC - 1
JE = JC - 1
R = R + (D(JE) + D(JC))*B2
WRITE TO DEV 6 VIA FORMAT 153 FROM THE LIST
NOTE 07
LIST = JC, R
ICN = ICN + 1
IDN = 0
CALCULATION OF THE C MATRIX ELEMENTS
NOTE 09
BEGIN DO LOOP 220 JJ = 1, M
IDN = IDN + 1
JJ - JC
BR(ICN,IDN) = PI2
BR(ICN,IDN) = 0.0
BI(ICN,IDN) = 0.0
MOD(IDN,45) .EQ. 0
FALSE
TRUE
WRITE TO DEV 6 VIA FORMAT 3718
WRITE TO DEV 6 VIA FORMAT 154 FROM THE LIST
NOTE 18
LIST = IDN, BR(ICN,IDN), BI(ICN,IDN)
END OF DO LOOP
NO
YES
CALCULATION OF THE A1 MATRIX ELEMENTS
NOTE 20
BEGIN DO LOOP 230 K = 1, N
B2C = B2*C(K)
K - 1
ZZ = - B2C
KL = K - 1
ZZ = ZZ - (C(KL) + C(K))*B2
IDN = IDN + 1
ZR = ABS(ZZ)
BR(ICN,IDN) = 0.0
BI(ICN,IDN) = 0.0
NOTE 26
BEGIN DO LOOP 270 I = 1, L
I - 2
CT = DT1
TT = 0.0

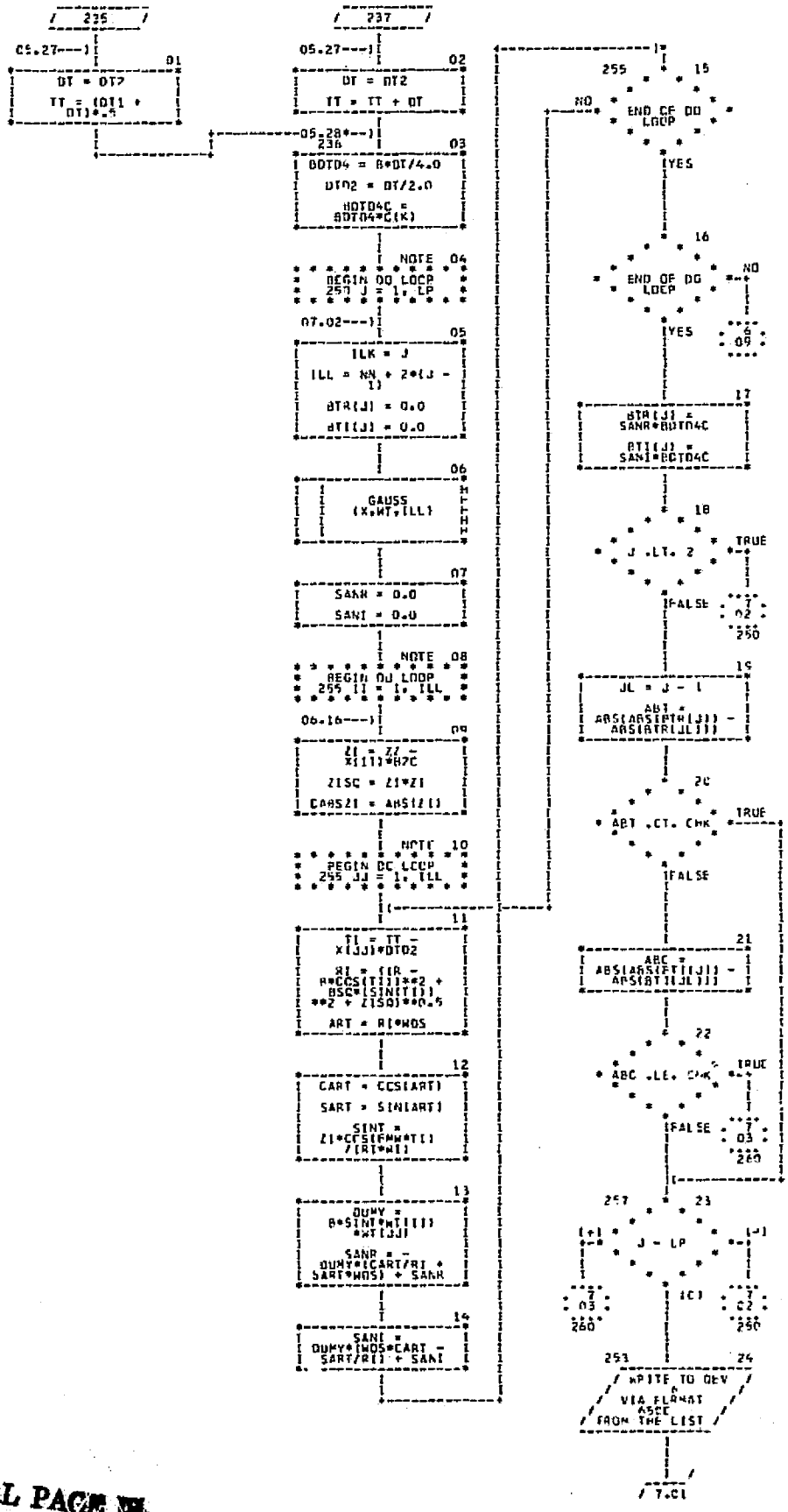

ORIGINAL PAGE IS OF POOR QUALITY

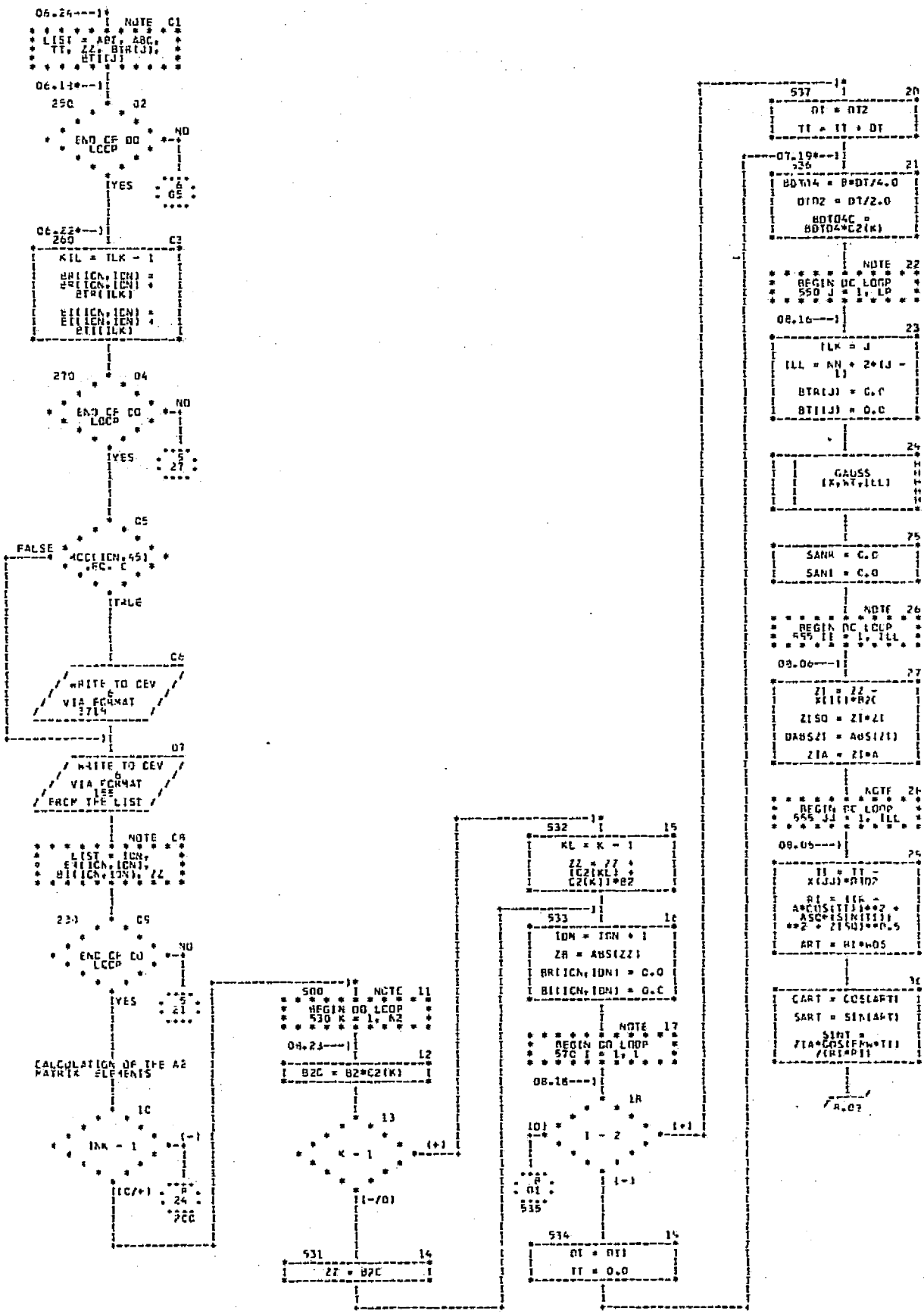

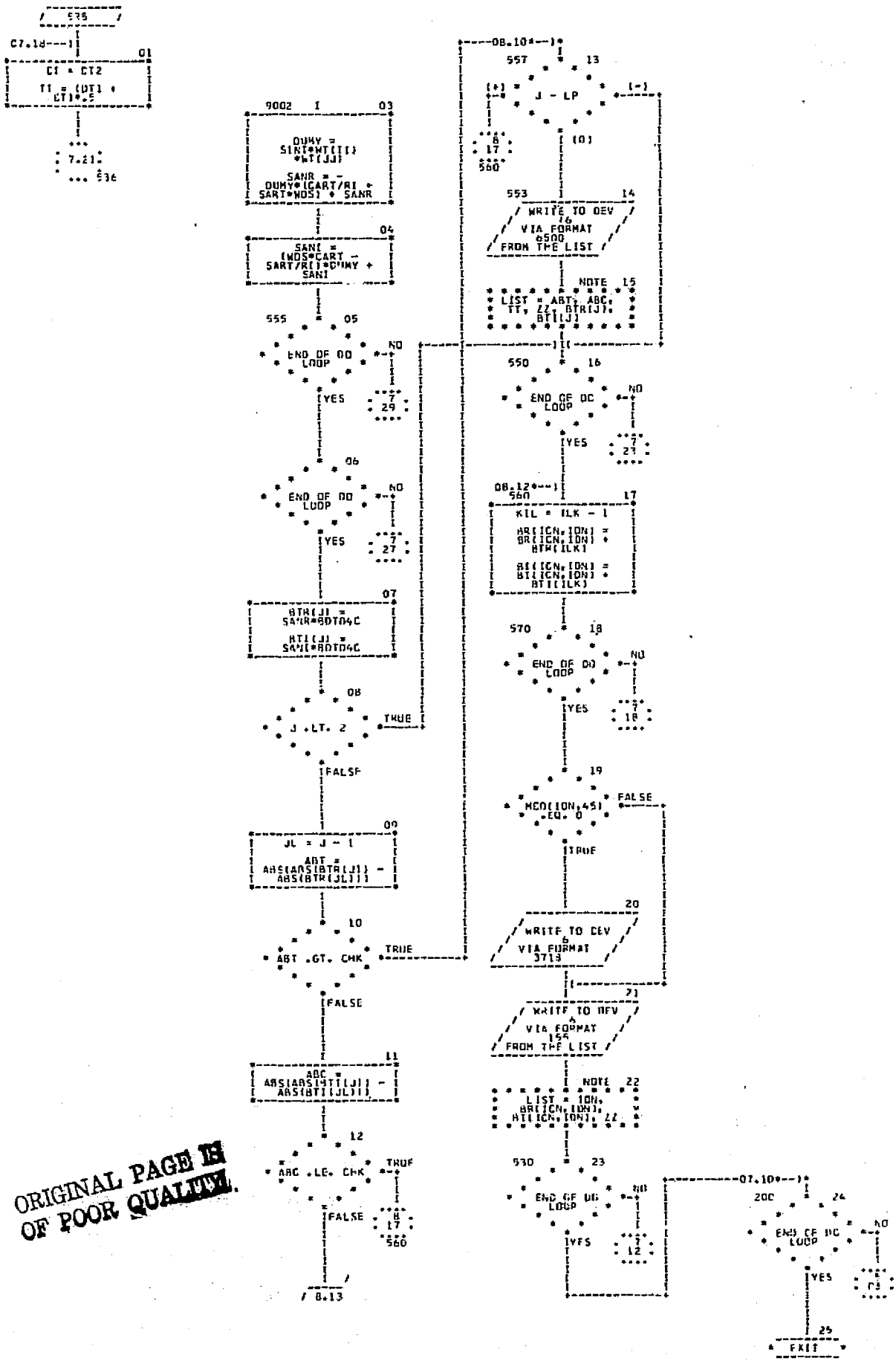

ORIGINAL PAGE IS OF POOR QUALITY

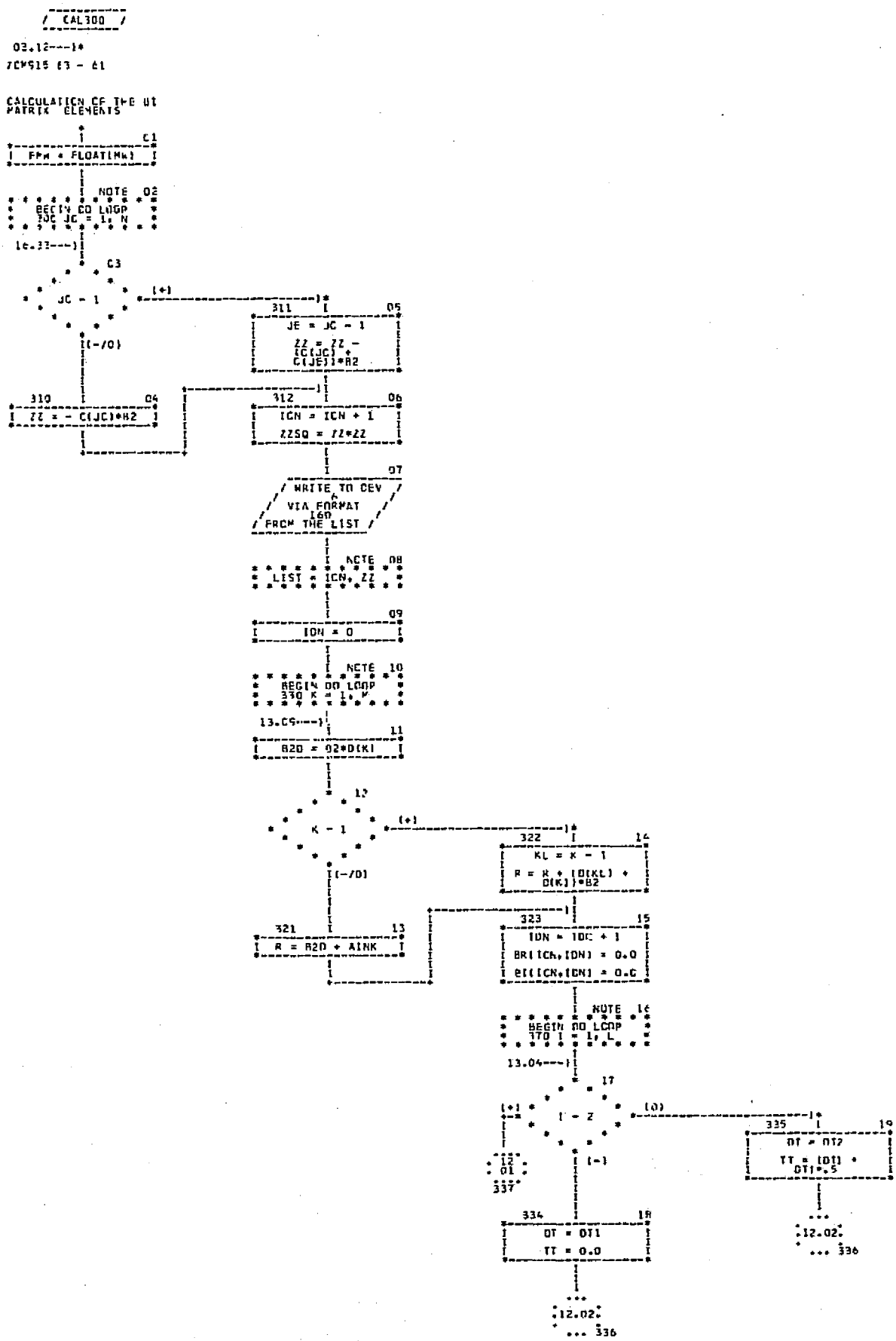
CAL300
CALCULATION OF THE UT MATRIX ELEMENTS
FPW = FLOAT(MW)
NOTE 02
BEGIN DO LOOP 300 JC = 1, N
JC - 1
(+)
(-/0)
311
JE = JC - 1
ZZ = ZZ - (C(JC) + C(JE))*B2
310
ZZ = - C(JC)*B2
312
ICN = ICN + 1
ZZSQ = ZZ*ZZ
WRITE TO DEV 6 VIA FORMAT 160 FROM THE LIST
NOTE 08
LIST = ICN, ZZ
IDN = 0
NOTE 10
BEGIN DO LOOP 330 K = 1, M
B2D = 02*D(K)
K - 1
(+)
(-/0)
322
KL = K - 1
R = R + (D(KL) + D(K))*B2
321
R = B2D + AINK
323
IDN = IDC + 1
BR(ICN,IDN) = 0.0
BI(ICN,IDN) = 0.0
NOTE 16
BEGIN DO LOOP 370 I = 1, L
I - 2
(+)
(0)
(-)
335
DT = DT2
TT = (DT) + DT1*.5
334
DT = DT1
TT = 0.0
12.02
336

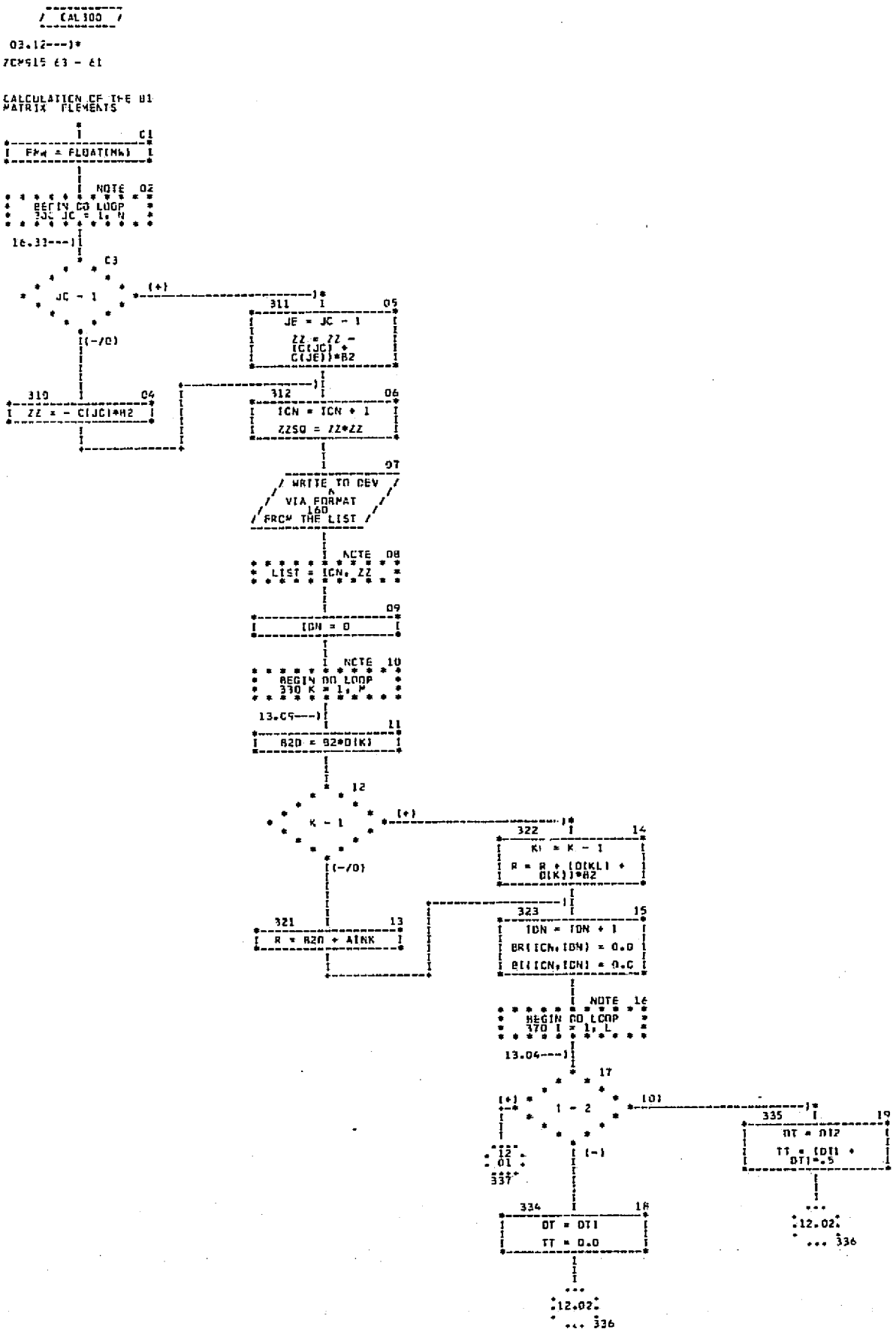
CAL100
03.12---)*
7CM515 63 - 61
CALCULATION OF THE B1 MATRIX ELEMENTS
C1
FRM = FLOAT(M+1)
NOTE 02
BEGIN DO LOOP
300 JC = 1, N
16.33---)
C3
JC - 1
(+)
(-/0)
311
05
JE = JC - 1
ZZ = ZZ - C(1,JC) * C(JE)*B2
310
04
ZZ = - C(1,JC)*B2
312
06
ICN = ICN + 1
ZZSQ = ZZ*ZZ
07
WRITE TO DEV
VIA FORMAT
160
FROM THE LIST
NOTE 08
LIST = ICN, ZZ
09
ICN = 0
NOTE 10
BEGIN DO LOOP
330 K = 1, M
13.09---)
11
B2D = B2*D(K)
12
K - 1
(+)
(-/0)
322
14
K1 = K - 1
R = R + (D(K1) + D(K))*B2
321
13
R = B2D + AINK
323
15
ICN = ICN + 1
BR(ICN,ICN) = 0.0
BI(ICN,ICN) = 0.0
NOTE 16
BEGIN DO LOOP
370 I = 1, L
13.04---)
17
I - 2
(+)
(-)
(0)
12
01
337
334
18
DT = DT1
TT = 0.0
335
19
DT = D12
TT = (D1) + DT1*.5
12.02
336
12.02
336

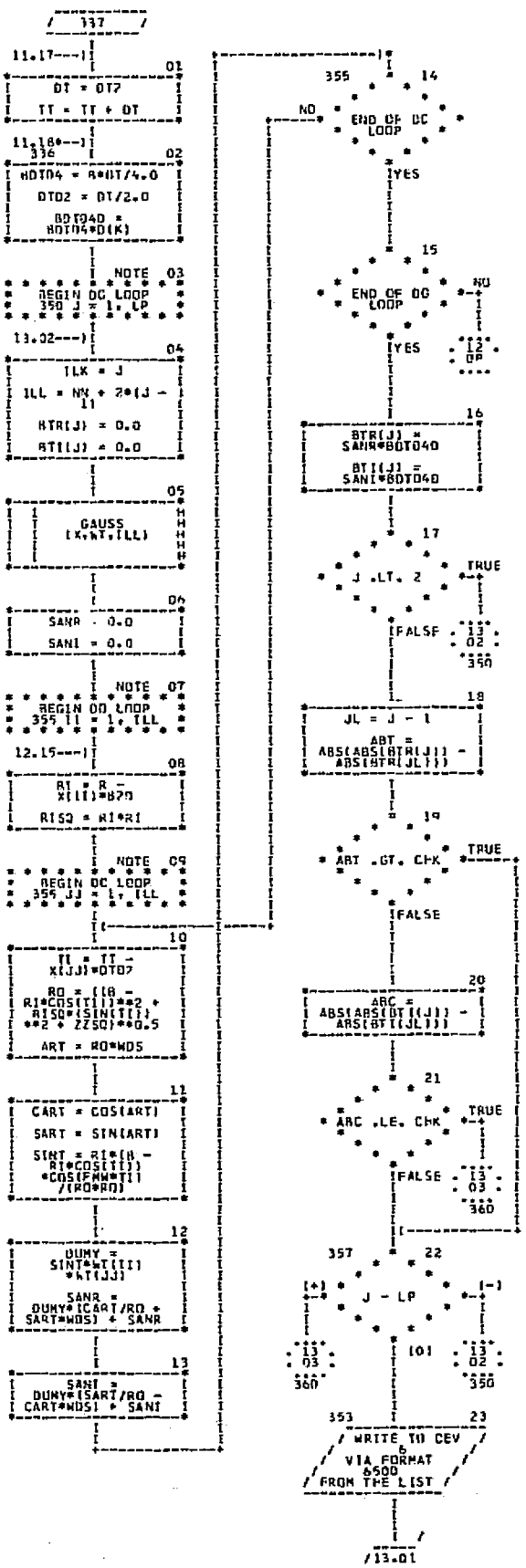
337
11.17
01
DT = DT2
TT = TT + DT
11.18
336
02
HDT04 = A*DT/4.0
DTD2 = DT/2.0
BDTD4D = HDT04*D(K)
NOTE 03
BEGIN DO LOOP
350 J = 1, LP
13.02
04
ILX = J
ILL = NN + 2*(J - 11
BTR(J) = 0.0
BTI(J) = 0.0
05
GAUSS (X,NT,ILL)
06
SANR = 0.0
SANI = 0.0
NOTE 07
BEGIN DO LOOP
355 II = 1, ILL
12.15
08
RI = R - X(II)*B20
RISQ = RI*RI
NOTE 09
BEGIN DO LOOP
355 JJ = 1, ILL
10
TI = TT - X(JJ)*DTD2
RO = (18 - RI*COS(TI))**2 + RISQ*(SIN(TI) **2 + ZZSQ)**0.5
ART = RO*WD5
11
CART = COS(ART)
SART = SIN(ART)
SINT = RI*(18 - RI*COS(TI)) *COS(FNN*TI) /(RO*RO)
12
DUMY = SINT*WI(II) *HT(JJ)
SANR = DUMY*(CART/RO + SART*WDS) + SANR
13
SANI = DUMY*(SART/RO - CART*WDS) + SANI
355
14
END OF DO LOOP
NO
YES
15
END OF DO LOOP
NO
YES
12.00
16
BTR(J) = SANR*BDTD40
BTI(J) = SANI*BDTD40
17
J .LT. 2
TRUE
FALSE
13.02
350
18
JL = J - 1
ABT = ABS(ABS(BTR(J)) - ABS(BTR(JL)))
19
ABT .GT. CHK
TRUE
FALSE
20
ARC = ABS(ABS(BTI(J)) - ABS(BTI(JL)))
21
ARC .LE. CHK
TRUE
FALSE
13.03
360
357
22
J - LP
(+)
(-)
(0)
13.03
360
13.02
350
353
23
WRITE TO CRT VIA FORMAT 6500 FROM THE LIST
/13.01

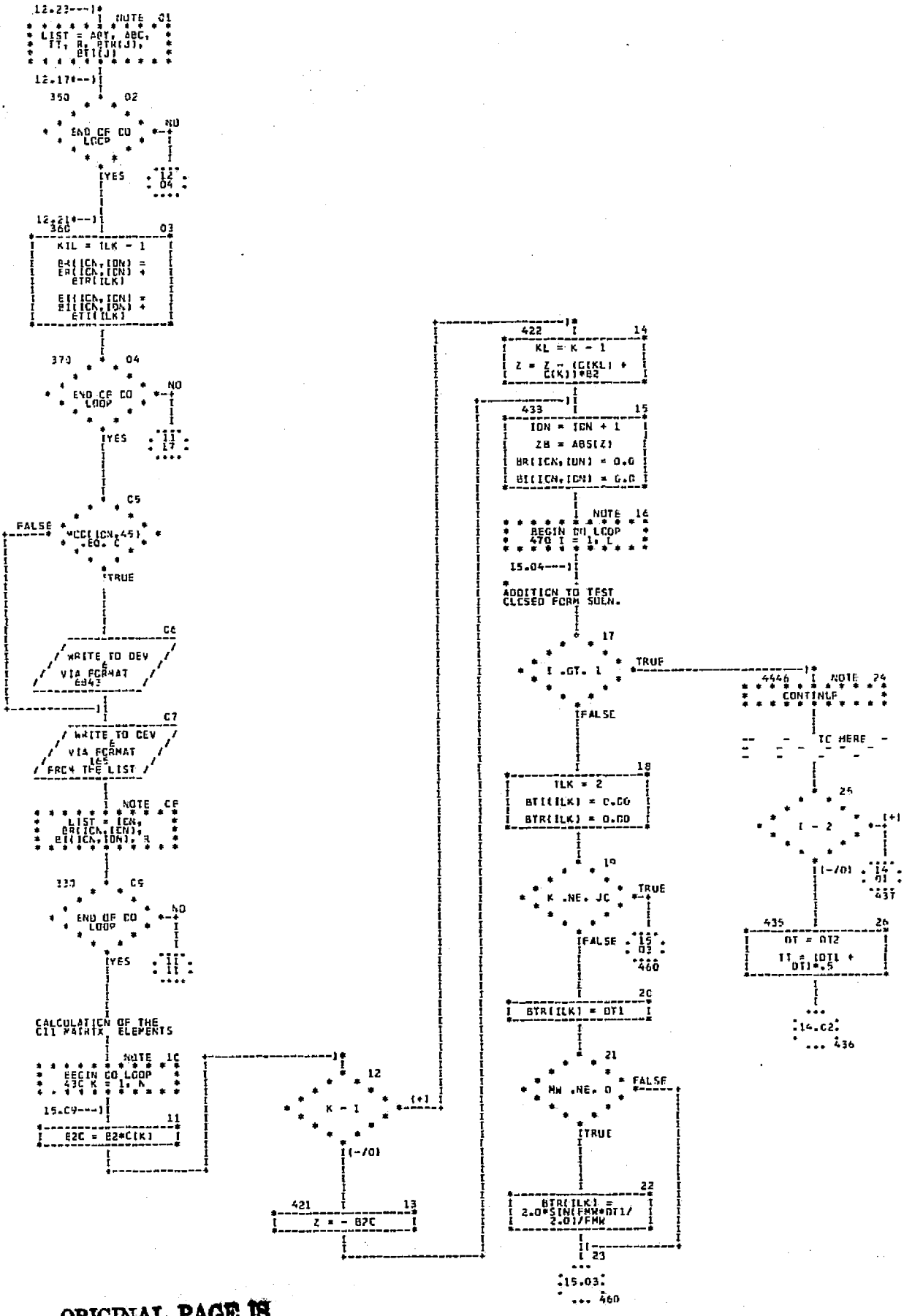

ORIGINAL PAGE IS
OF POOR QUALITY

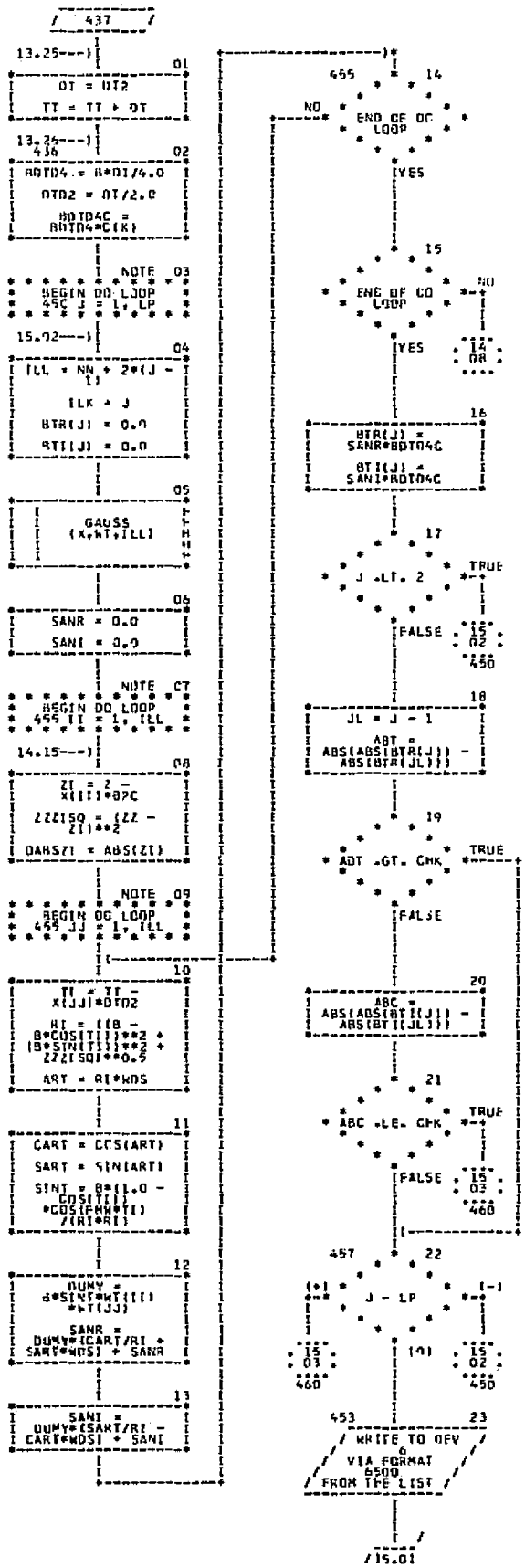
/ 437 /
13.25
01
DT = DT2
TT = TT + DT
13.26
436
02
BDTD4 = B*DT/4.0
DTD2 = DT/2.0
BDTD4C = BDTD4*C(K)
NOTE 03
BEGIN DO LOOP
455 J = 1, LP
15.02
04
ILL = NN + 2*(J - 1)
ILK = J
BTR(J) = 0.0
BTI(J) = 0.0
05
GAUSS (X,WT,ILL)
06
SANR = 0.0
SANI = 0.0
NOTE 07
BEGIN DO LOOP
455 II = 1, ILL
14.15
08
ZI = Z - X(II)*BDC
ZZZISQ = (ZZ - ZI)**2
DABSZI = ABS(ZI)
NOTE 09
BEGIN DO LOOP
455 JJ = 1, ILL
10
TT = TT - X(JJ)*DTD2
RI = ((B - B*COS(T(I))**2 + (B*SIN(T(I))**2 + ZZZISQ)**0.5
ART = RI*WDS
11
CART = COS(ART)
SART = SIN(ART)
SINT = B*(1.0 - COS(T(I)) *COS(FMM*T(I)) /(RI*RI)
12
DUMY = 6*SINT*WT(II) *WT(JJ)
SANR = DUMY*(CART/RI + SART*WDS) + SANR
13
SANI = DUMY*(SART/RI - CART*WDS) + SANI
NO
455
14
END OF DO LOOP
YES
15
END OF DO LOOP
80
YES
14 08
16
BTR(J) = SANR*BDTD4C
BTI(J) = SANI*BDTD4C
17
J .LT. 2
TRUE
FALSE
15 02
450
18
JL = J - 1
ABT = ABS(ABS(BTR(J)) - ABS(BTR(JL)))
19
ABT .GT. CHK
TRUE
FALSE
20
ABC = ABS(ABS(BTI(J)) - ABS(BTI(JL)))
21
ABC .LE. CHK
TRUE
FALSE
15 03
460
457
22
J - LP
(+)
(-)
(0)
15 03
460
15 02
450
453
23
WRITE TO DEV 6 VIA FORMAT 6500 FROM TPE LIST
/15.01

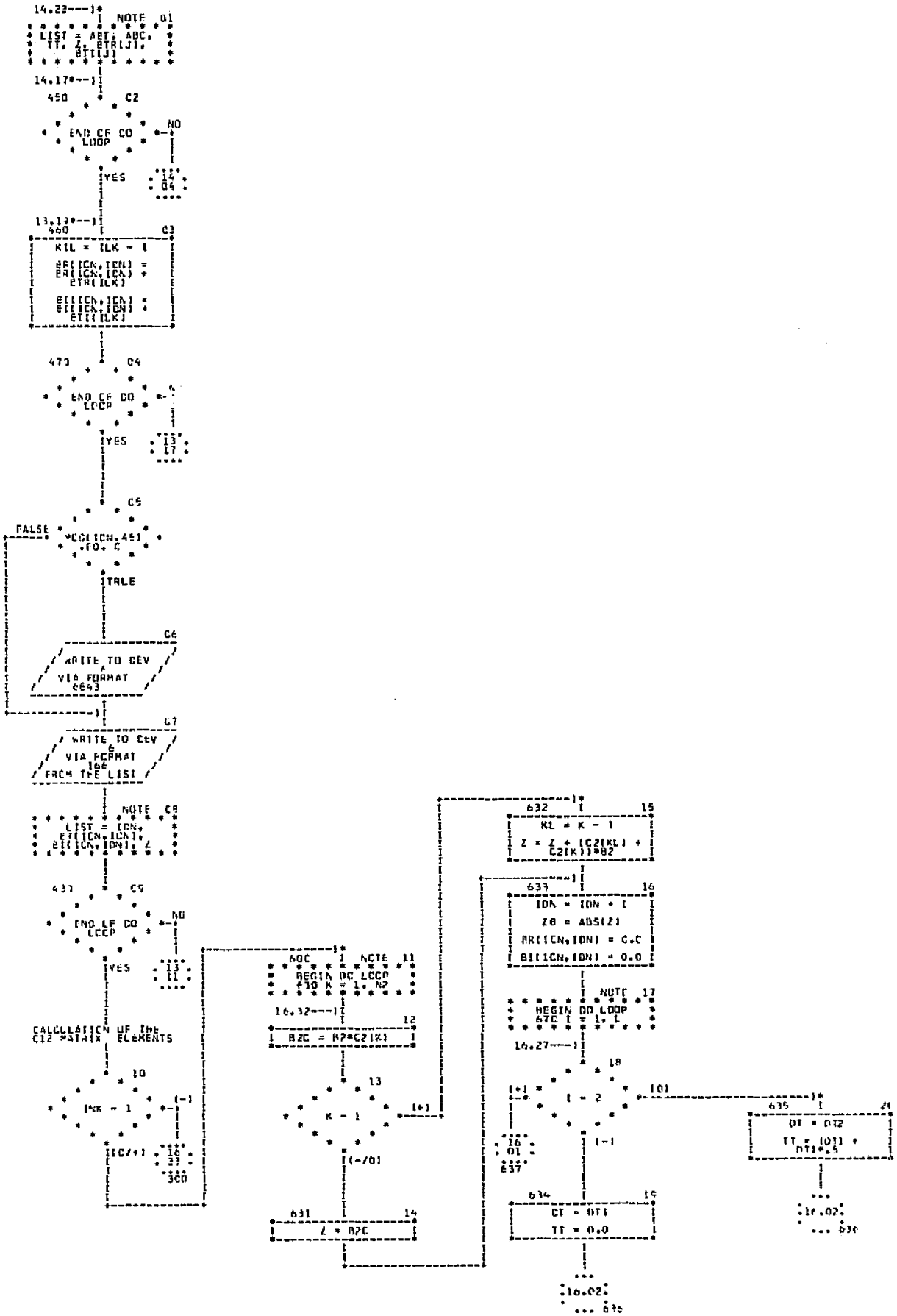

ORIGINAL PAGE IS
OF POOR QUALITY

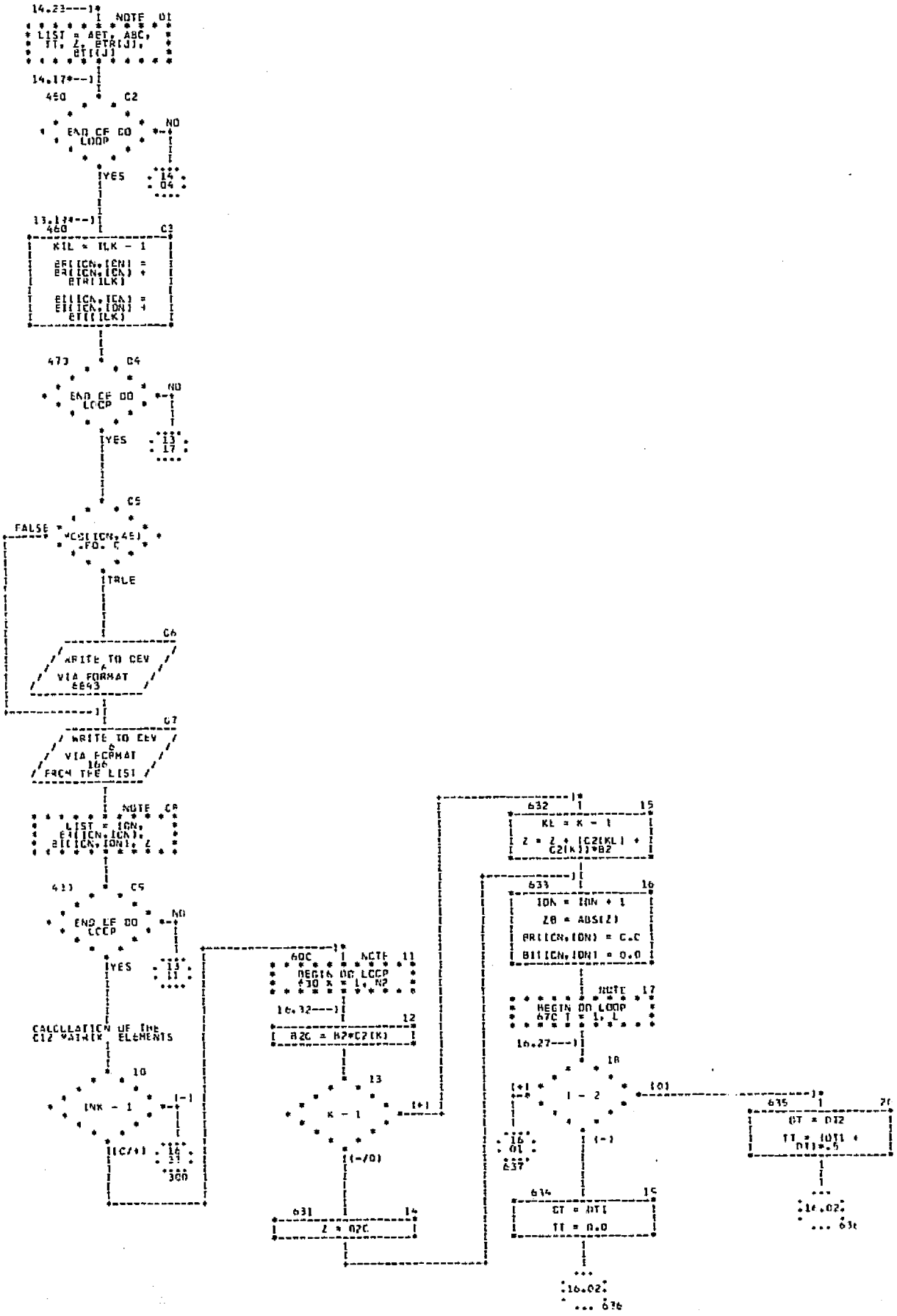

NOTE 01
LIST = ABT, ABC, TT, Z, BTR(J), BTI(J)
14.17
450
C2
END OF DO LOOP
NO
YES
14
04
13.17
460
C3
KIL = ILK - 1
BR(ICN,ICN) = BR(ICN,ICN) + BTR(ILK)
BI(ICN,ICN) = BI(ICN,ICN) + BTI(ILK)
470
C4
END OF DO LOOP
NO
YES
13
17
C5
FALSE
MOD(ICN,45) .EQ. 0
TRUE
C6
WRITE TO DEV 6 VIA FORMAT 6843
C7
WRITE TO DEV 6 VIA FORMAT 166 FROM THE LIST
NOTE C8
LIST = ICN, BI(ICN,ICN), BI(ICN,ION), Z
C9
END OF DO LOOP
NO
YES
13
11
CALCULATION OF THE C12 MATRIX ELEMENTS
10
INK - 1
(-)
(C/+)
16
31
300
600
NOTE 11
BEGIN DO LOOP 630 K = 1, N2
16.32
12
B2C = B2*C2(K)
13
K - 1
(+)
(-/0)
631
14
Z = B2C
632
15
KL = K - 1
Z = Z + (C2(KL) + C2(K))*B2
633
16
ION = ION + 1
ZB = ABS(Z)
BR(ICN,ION) = 0.0
BI(ICN,ION) = 0.0
NOTE 17
BEGIN DO LOOP 670 I = 1, L
16.27
18
I - 2
(+)
(0)
(-)
16
01
637
634
19
DT = DTI
TT = 0.0
16.02
636
635
20
DT = DT2
TT = (DT1 + DT)*.5
16.02
636

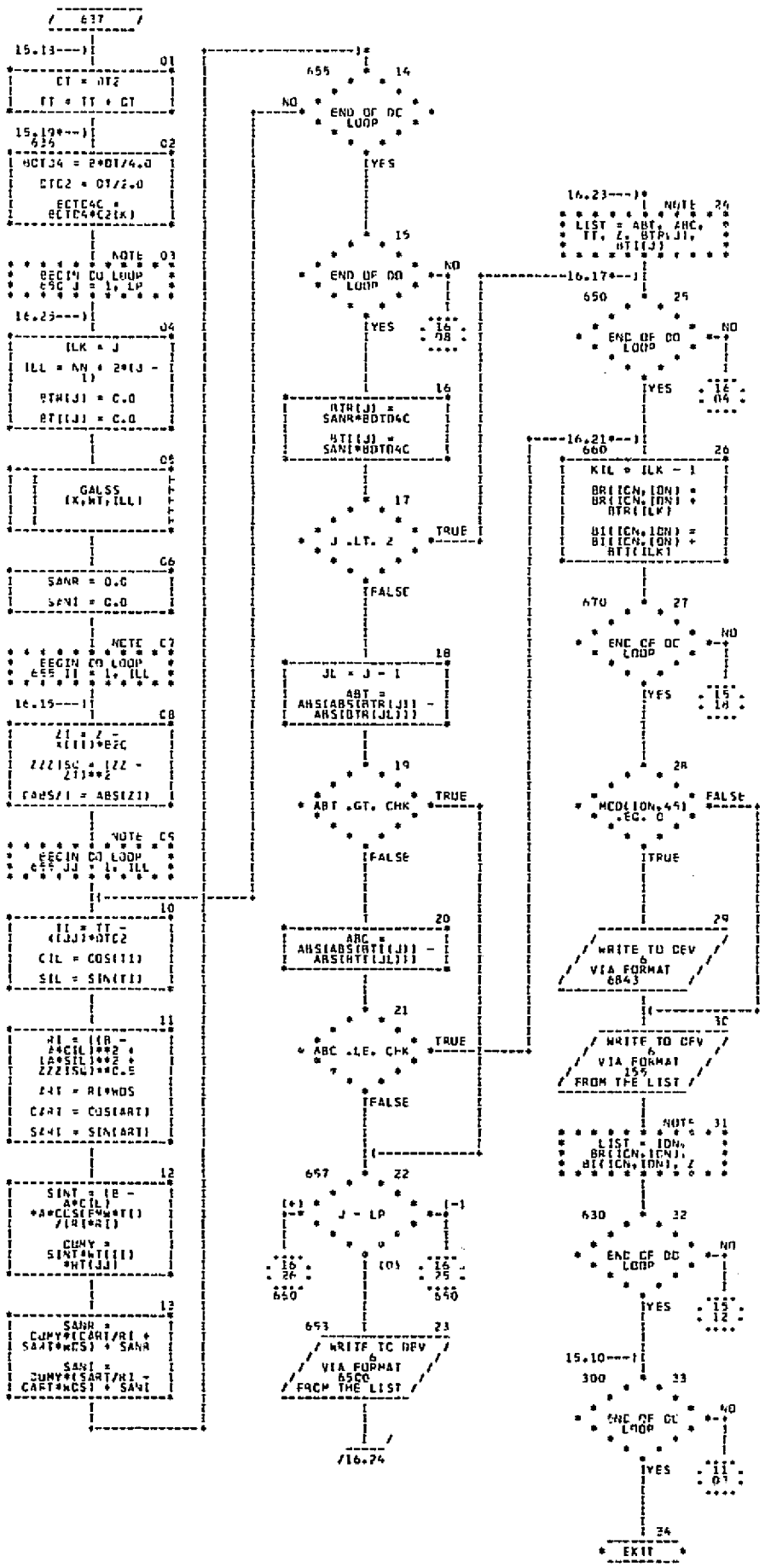

637
15.13
01
CT = DT2
TT = TT + CT
15.19
636
02
BCTD4 = 2*DT/4.0
CTC2 = DT/2.0
BCTC4C = BCTC4*C2(K)
NOTE 03
BEGIN DO LOOP 650 J = 1, LP
16.25
04
ILK = J
ILL = NN + 2*(J - 1)
BTR(J) = 0.0
BTI(J) = 0.0
05
GALSS (X,WT,ILL)
06
SANR = 0.0
SANI = 0.0
NOTE 07
BEGIN DO LOOP 655 II = 1, ILL
16.15
08
ZI = Z - X(II)*B2C
ZZZISQ = (ZZ - ZI)**2
CABSZI = ABS(ZI)
NOTE 09
BEGIN DO LOOP 655 JJ = 1, ILL
10
TI = TT - X(JJ)*DTC2
CIL = COS(TI)
SIL = SIN(TI)
11
RI = (B - A*CIL)**2 + (A*SIL)**2 + ZZZISQ)**0.5
ART = RI*WDS
CART = COS(ART)
SART = SIN(ART)
12
SINT = (B - A*CIL) *A*COS(FMW*TI) /(RI*RI)
DUMY = SINT*WT(II) *WT(JJ)
13
SANR = DUMY*(CART/RI + SART*WDS) + SANR
SANI = DUMY*(SART/RI - CART*WDS) + SANI
655
14
END OF DO LOOP
NO
YES
15
END OF DO LOOP
NO
YES
16.08
16
BTR(J) = SANR*BDTD4C
BTI(J) = SANI*BDTD4C
17
J .LT. 2
TRUE
FALSE
18
JL = J - 1
ABT = ABS(ABS(BTR(JJ)) - ABS(BTR(JL)))
19
ABT .GT. CHK
TRUE
FALSE
20
ABC = ABS(ABS(BTI(JJ)) - ABS(BTI(JL)))
21
ABC .LE. CHK
TRUE
FALSE
657
22
J - LP
(+)
(-)
(0)
16.26
650
16.25
650
653
23
WRITE TO DEV 6 VIA FORMAT 6500 FROM THE LIST
/16.24
16.23
NOTE 24
LIST = ABT, ABC, TT, Z, BTR(J), BTI(J)
16.17
650
25
END OF DO LOOP
NO
YES
16.04
16.21
660
26
KIL = ILK - 1
BR(ICN,IDN) = BR(ICN,IDN) + BTR(ILK)
BI(ICN,IDN) = BI(ICN,IDN) + BTI(ILK)
670
27
END OF DO LOOP
NO
YES
15.18
28
MOD(IDN,45) .EQ. 0
FALSE
TRUE
29
WRITE TO DEV 6 VIA FORMAT 6843
30
WRITE TO DEV 6 VIA FORMAT 155 FROM THE LIST
NOTE 31
LIST = IDN, BR(ICN,IDN), BI(ICN,IDN), Z
630
32
END OF DO LOOP
NO
YES
15.12
15.10
300
33
END OF DO LOOP
NO
YES
11.03
34
EXIT

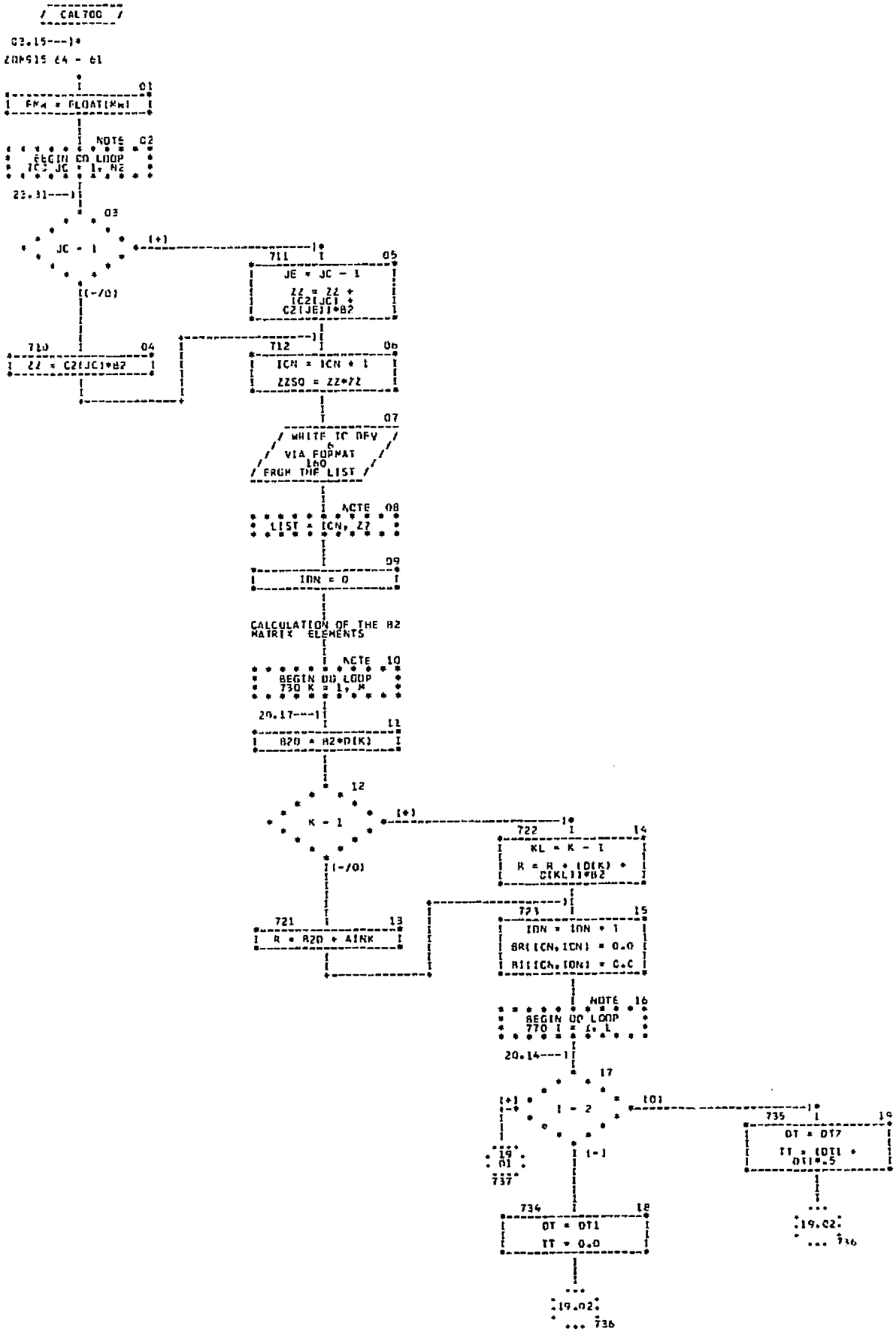
/ CAL700 /
03.15---)*
ZOMS15 64 - 61
01
FMW = FLOAT(MW)
NOTE 02
BEGIN DO LOOP
700 JC = 1, N2
23.31---)
03
JC - 1
(+)
(-/0)
711
05
JE = JC - 1
ZZ = ZZ +
(C2(JC) +
C2(JE))*B2
710
04
ZZ = C2(JC)*B2
712
06
ICN = ICN + 1
ZZSQ = ZZ*ZZ
07
WRITE TO DEV
6
VIA FORMAT
160
FROM THE LIST
NOTE 08
LIST = ICN, ZZ
09
IDN = 0
CALCULATION OF THE B2
MATRIX ELEMENTS
NOTE 10
BEGIN DO LOOP
730 K = 1, M
20.17---)
11
B2D = B2*D(K)
12
K - 1
(+)
(-/0)
722
14
KL = K - 1
R = R + (D(K) +
D(KL))*B2
721
13
R = B2D + AINK
723
15
IDN = IDN + 1
BR(ICN,ICN) = 0.0
BI(ICN,IDN) = 0.0
NOTE 16
BEGIN DO LOOP
770 I = 1, L
20.14---)
17
I - 2
(+)
(0)
(-)
19
01
737
735
19
DT = DT7
TT = (DT1 +
DT)*.5
734
18
DT = DT1
TT = 0.0
19.02
736
19.02
736

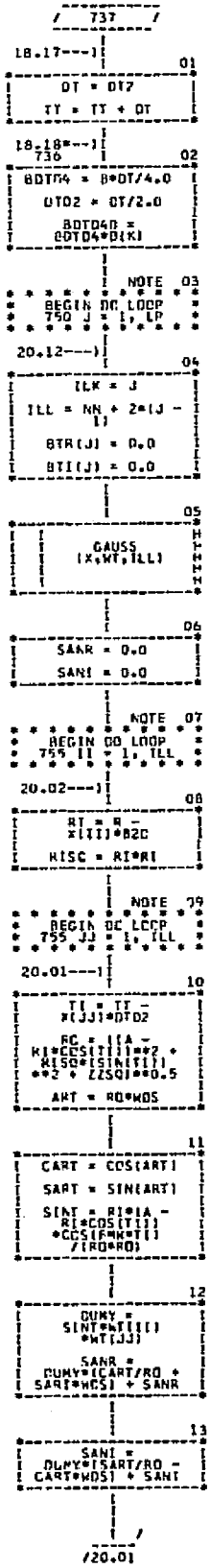
/ 737 /
18.17---)
01
DT = DT7
TT = TT + DT
18.18*--)
736
02
BDTD4 = B*DT/4.0
DTD2 = DT/2.0
BDTD4B =
BDTD4*B(K)
NOTE 03
BEGIN DO LOOP
750 J = 1, LP
20.12---)
04
ILK = J
ILL = NN + 2*(J - 1)
BTR(J) = 0.0
BTI(J) = 0.0
05
GAUSS
(X,WT,ILL)
06
SANR = 0.0
SANI = 0.0
NOTE 07
BEGIN DO LOOP
755 II = 1, ILL
20.02---)
08
RI = R -
X(II)*B2C
RISC = RI*RI
NOTE 09
BEGIN DO LOOP
755 JJ = 1, ILL
20.01---)
10
TI = TT -
X(JJ)*DTD2
RC = ((A -
RI*COS(T(I))**2 +
RISQ*(SIN(T(I))
2 + ZZSQ)0.5
ART = RO*WOS
11
CART = COS(ART)
SART = SIN(ART)
SINT = RI*(A -
RI*COS(T(I))
*COS(FM*WT(I)
/(RO*RO)
12
DUMY =
SINT**4*T(I,I)
*WT(JJ)
SANR =
DUMY*(CART/RO +
SART*WOS) + SANR
13
SANI =
DUMY*(SART/RO -
CART*WOS) + SANI
/20.01

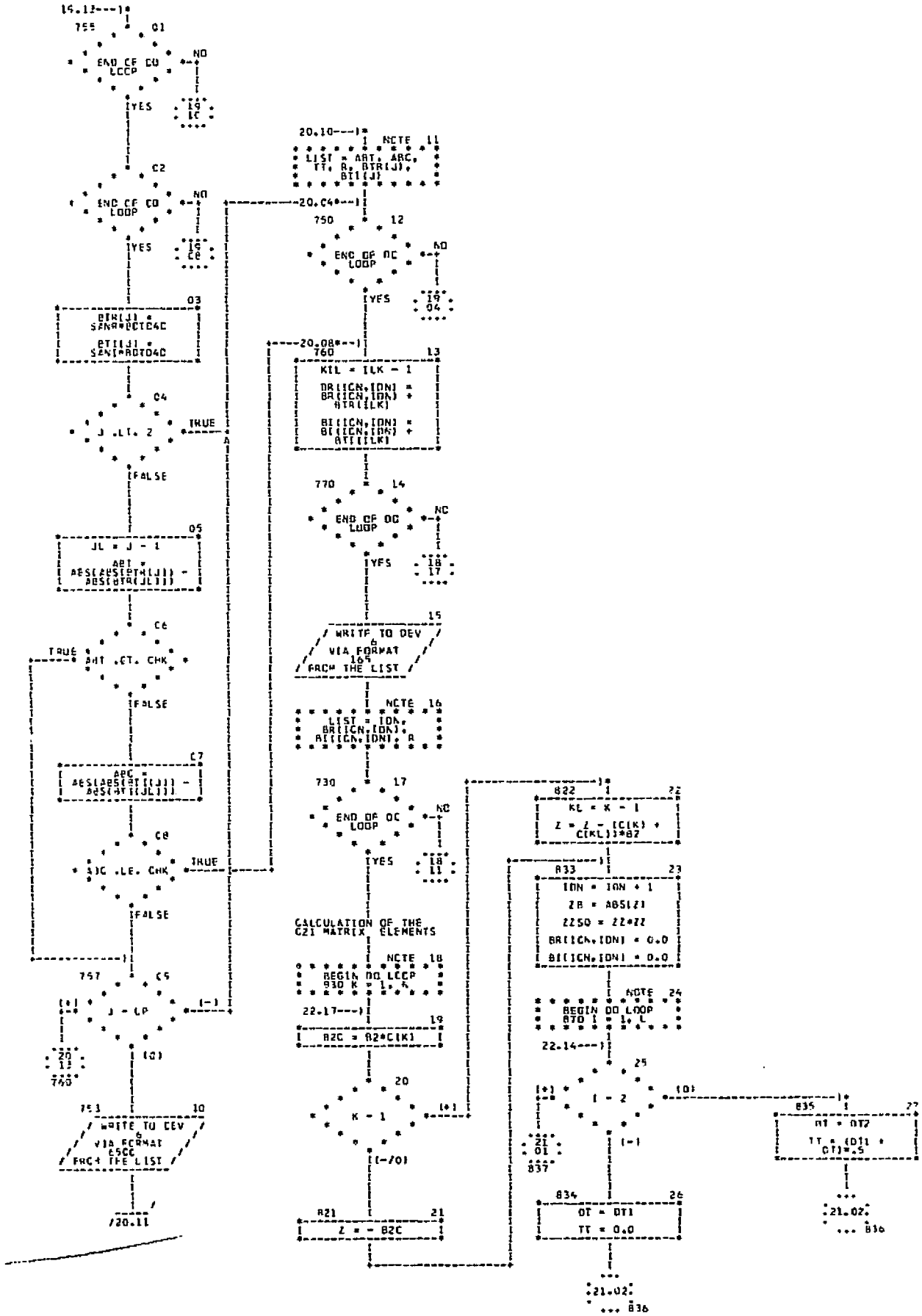

19.13
755
01
END OF DO LOOP
NO
YES
19 10
C2
END OF DO LOOP
NO
YES
19 08
03
BTR(J) = SANR*BDTD4D
BTI(J) = SANI*BDTD4D
04
J .LT. 2
TRUE
FALSE
05
JL = J - 1
ABT = ABS(ABS(BTR(J)) - ABS(BTR(JL)))
C6
TRUE
ABT .GT. CHK
FALSE
C7
ABC = ABS(ABS(BTI(J)) - ABS(BTI(JL)))
C8
ABC .LE. CHK
TRUE
FALSE
757
C5
J - LP
(+)
(-)
(0)
20 13
760
753
10
WRITE TO DEV 6 VIA FORMAT 6500 FROM THE LIST
/20.11
20.10
NOTE 11
LIST = ABT, ABC, TT, R, BTR(J), BTI(J)
20.04
750
12
END OF DO LOOP
NO
YES
19 04
20.08
760
13
KIL = ILK - 1
BR(ICN,IDN) = BR(ICN,IDN) + BTR(ILK)
BI(ICN,IDN) = BI(ICN,IDN) + BTI(ILK)
770
14
END OF DO LOOP
NO
YES
18 17
15
WRITE TO DEV 6 VIA FORMAT 165 FROM THE LIST
NOTE 16
LIST = IDN, BR(ICN,IDN), BI(ICN,IDN), R
730
17
END OF DO LOOP
NO
YES
18 11
CALCULATION OF THE C21 MATRIX ELEMENTS
NOTE 18
BEGIN DO LOOP 830 K = 1, K
22.17
19
B2C = B2*C(K)
20
K - 1
(+)
(-/0)
821
21
Z = - B2C
822
22
KL = K - 1
Z = Z - (C(K) + C(KL))*B2
833
23
IDN = IDN + 1
ZB = ABS(Z)
ZZSQ = ZZ*ZZ
BR(ICN,IDN) = 0.0
BI(ICN,IDN) = 0.0
NOTE 24
BEGIN DO LOOP 870 I = 1, L
22.14
25
I - 2
(+)
(0)
(-)
21 01
837
834
26
DT = DT1
TT = 0.0
21.02
836
835
27
DT = DT2
TT = (DT1 + DT)*.5
21.02
836

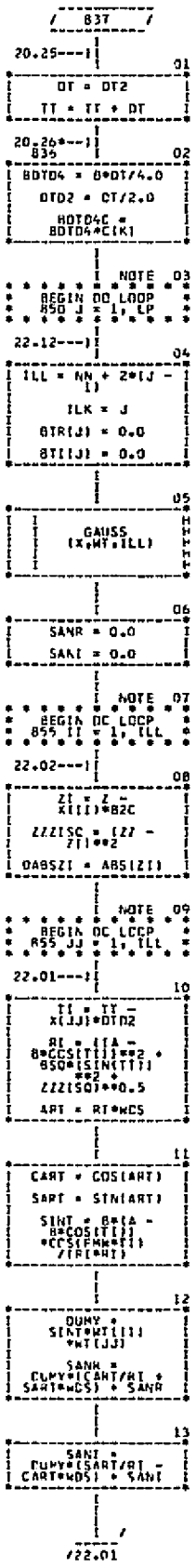

ORIGINAL PAGE IS
OF POOR QUALITY

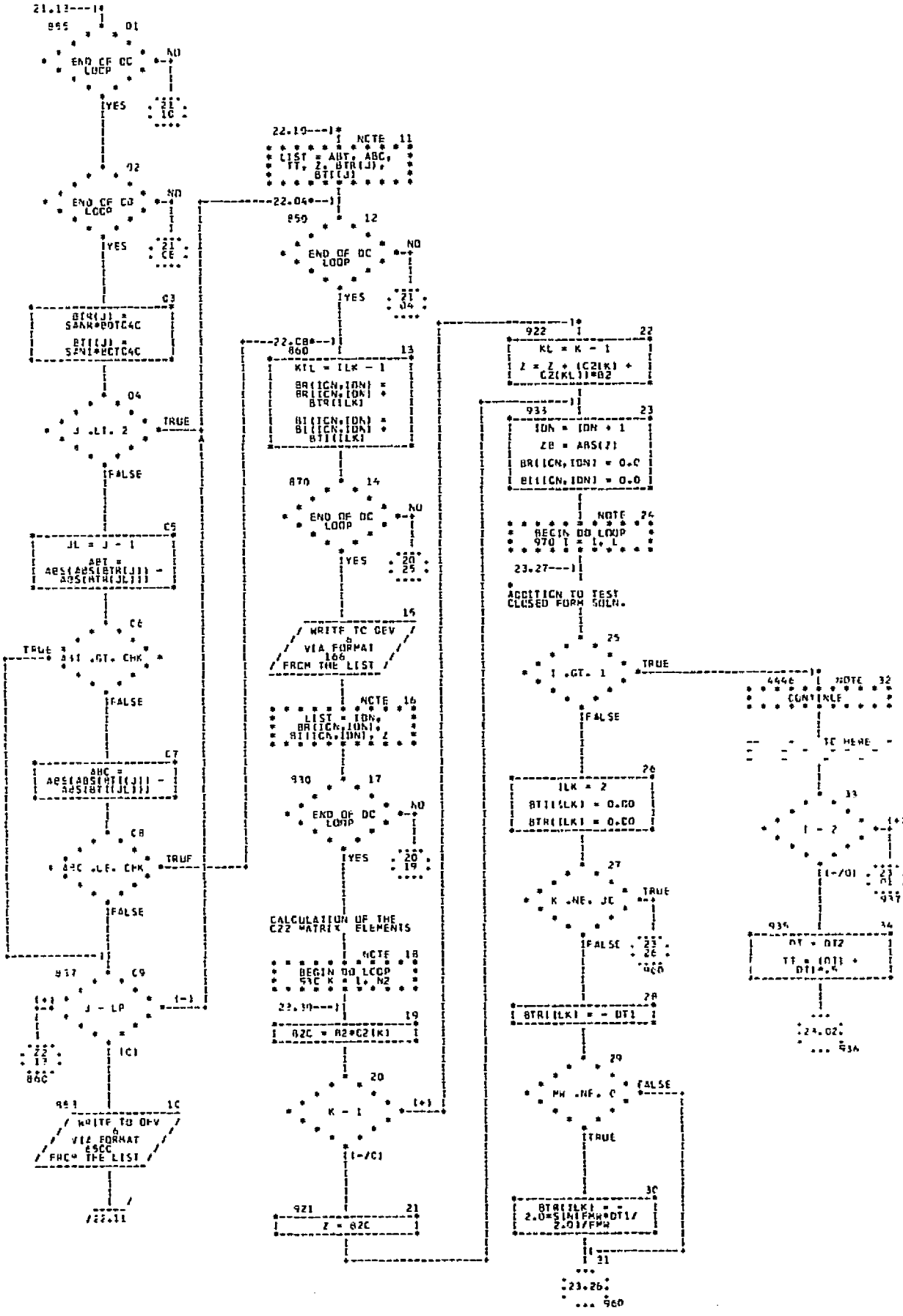
END OF DO LOOP
NO
YES
TRUE
FALSE
WRITE TO DEV
VIA FORMAT
FROM THE LIST
NOTE
BEGIN DO LOOP
CALCULATION OF THE
C22 MATRIX ELEMENTS
ADDITION TO TEST
CLOSED FORM SOLN.
TO HERE

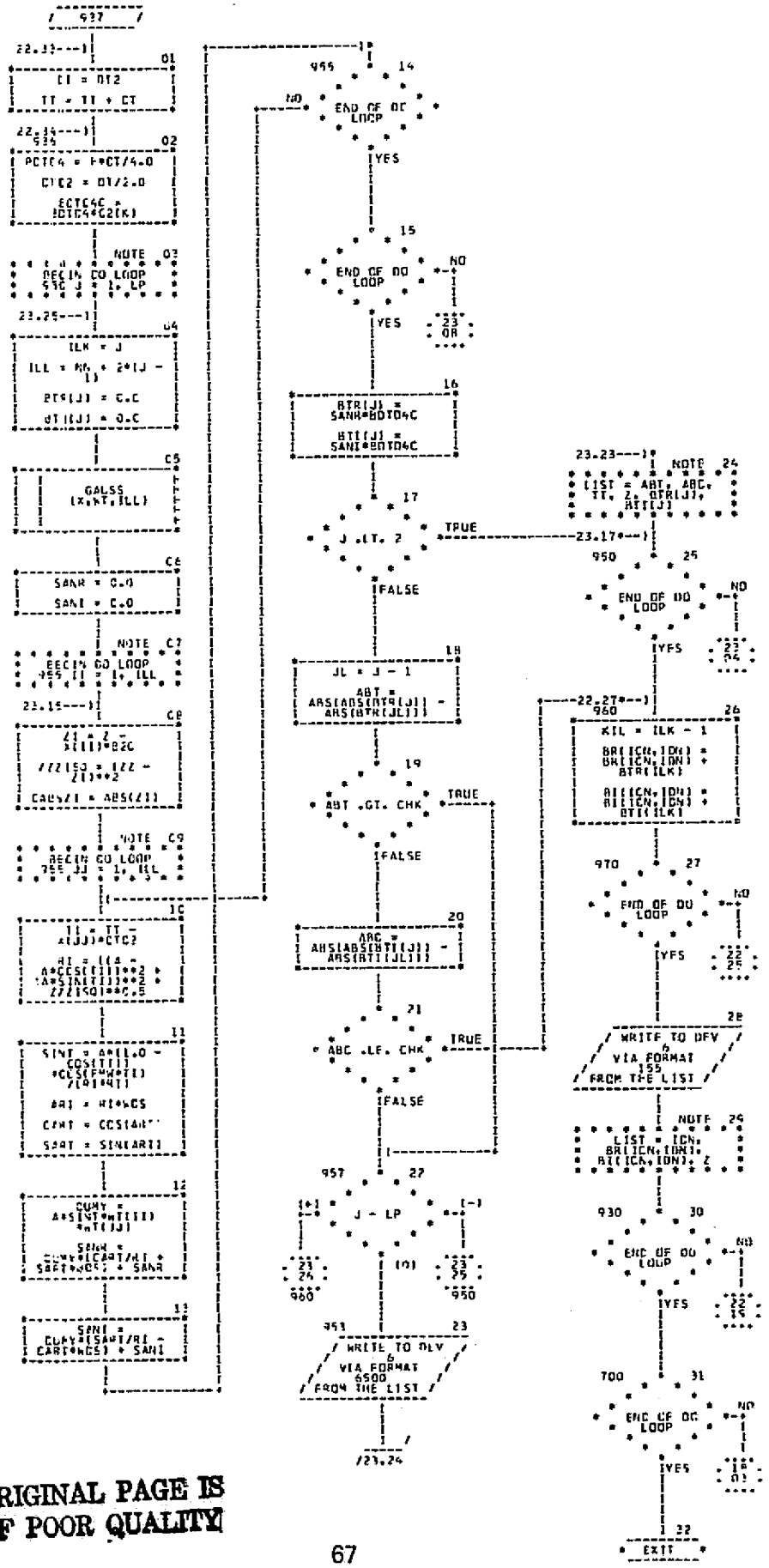

ORIGINAL PAGE IS
OF POOR QUALITY

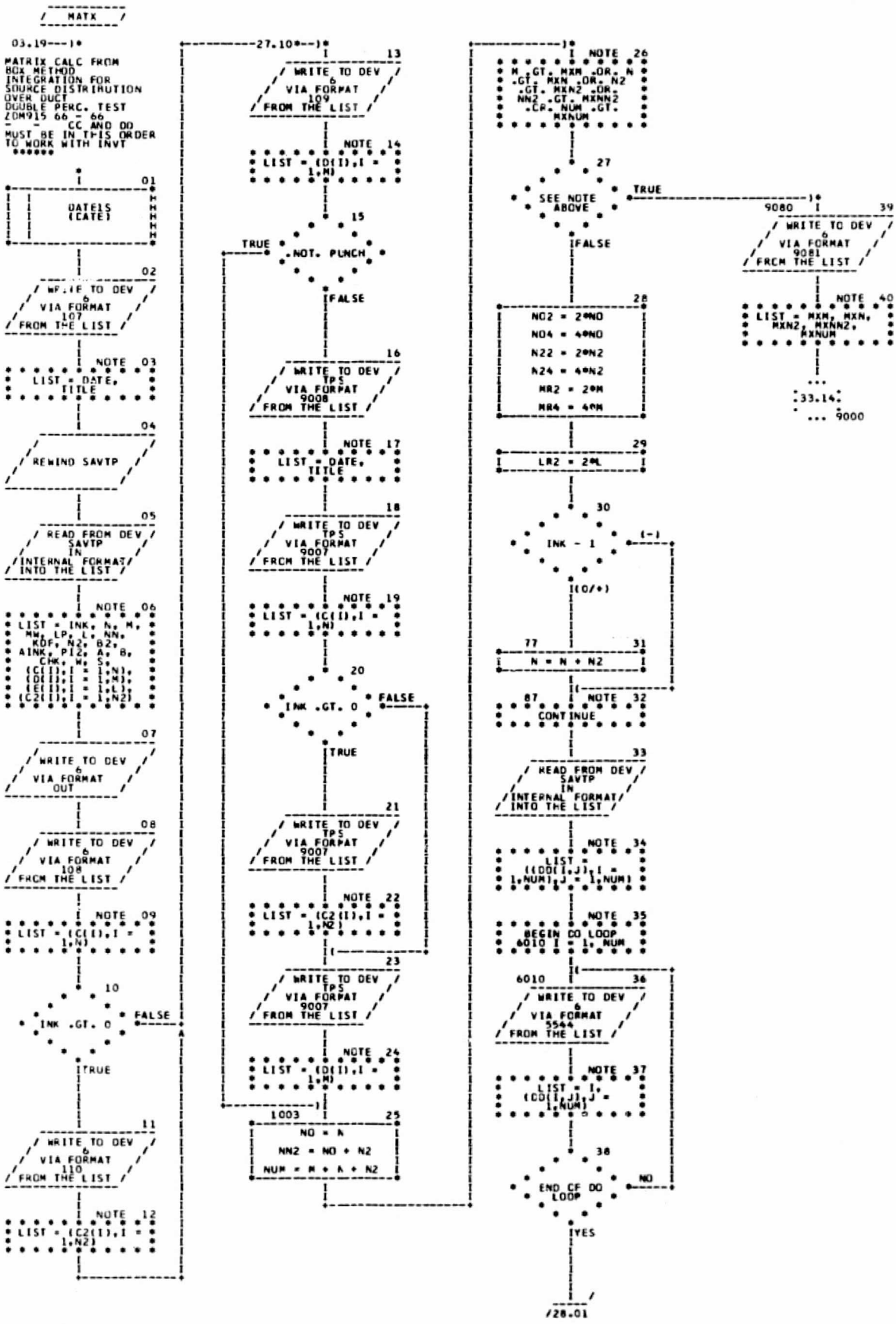
MATX
03.19
MATRIX CALC FROM BOX METHOD INTEGRATION FOR SOURCE DISTRIBUTION OVER DUCT DOUBLE PERC. TEST ZDM915 66 - 66
CC AND DO MUST BE IN THIS ORDER TO WORK WITH INVT
01 DATE1S (DATE)
02 WRITE TO DEV 6 VIA FORMAT 107 FROM THE LIST
NOTE 03 LIST = DATE, TITLE
04 REWIND SAVTP
05 READ FROM DEV SAVTP IN INTERNAL FORMAT INTO THE LIST
NOTE 06 LIST = INK, N, M, MM, LP, L, NN, KOF, N2, B2, AINK, PI2, A, B, CHK, W, S, ((C(I),I = 1,N), ((D(I),I = 1,M), ((E(I),I = 1,L), ((C2(I),I = 1,N2)
07 WRITE TO DEV 6 VIA FORMAT OUT
08 WRITE TO DEV 6 VIA FORMAT 108 FROM THE LIST
NOTE 09 LIST = ((C(I),I = 1,N)
10 INK .GT. 0
FALSE
TRUE
11 WRITE TO DEV 6 VIA FORMAT 110 FROM THE LIST
NOTE 12 LIST = ((C2(I),I = 1,N2)
27.10
13 WRITE TO DEV 6 VIA FORMAT 109 FROM THE LIST
NOTE 14 LIST = ((D(I),I = 1,M)
15 .NOT. PUNCH
TRUE
FALSE
16 WRITE TO DEV TPS VIA FORMAT 9008 FROM THE LIST
NOTE 17 LIST = DATE, TITLE
18 WRITE TO DEV TPS VIA FORMAT 9007 FROM THE LIST
NOTE 19 LIST = ((C(I),I = 1,N)
20 INK .GT. 0
FALSE
TRUE
21 WRITE TO DEV TPS VIA FORMAT 9007 FROM THE LIST
NOTE 22 LIST = ((C2(I),I = 1,N2)
23 WRITE TO DEV TPS VIA FORMAT 9007 FROM THE LIST
NOTE 24 LIST = ((D(I),I = 1,M)
1003 25 NO = N NN2 = NO + N2 NUM = M + N + N2
NOTE 26 M .GT. MXM .OR. N .GT. MXN .OR. N2 .GT. MXN2 .OR. NN2 .GT. MXNN2 .OR. NUM .GT. MXNUM
27 SEE NOTE ABOVE
TRUE
FALSE
9080 39 WRITE TO DEV 6 VIA FORMAT 9081 FROM THE LIST
NOTE 40 LIST = MXM, MXN, MXN2, MXNN2, MXNUM
33.14
9000
28 NO2 = 2*NO NO4 = 4*NO N22 = 2*N2 N24 = 4*N2 MR2 = 2*M MR4 = 4*M
29 LR2 = 2*L
30 INK - 1
(-)
(0/+)
77 31 N = N + N2
87 NOTE 32 CONTINUE
33 READ FROM DEV SAVTP IN INTERNAL FORMAT INTO THE LIST
NOTE 34 LIST = ((DD(I,J),I = 1,NUM),J = 1,NUM)
NOTE 35 BEGIN DO LOOP 6010 I = 1, NUM
6010 36 WRITE TO DEV 6 VIA FORMAT 5544 FROM THE LIST
NOTE 37 LIST = I, ((DD(I,J),J = 1,NUM)
38 END OF DO LOOP
NO
YES
/28.01

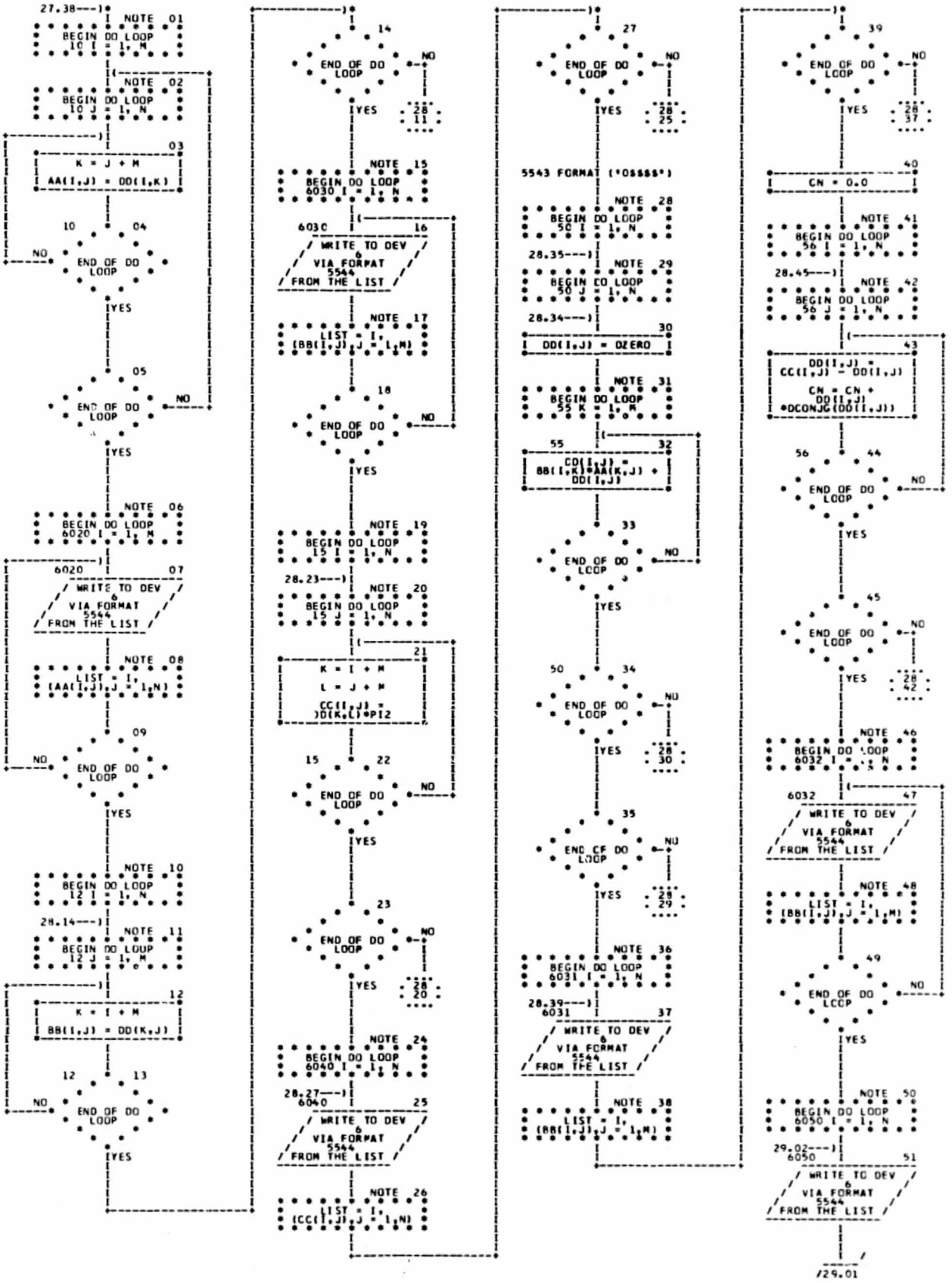

ORIGINAL PAGE IS
OF POOR QUALITY

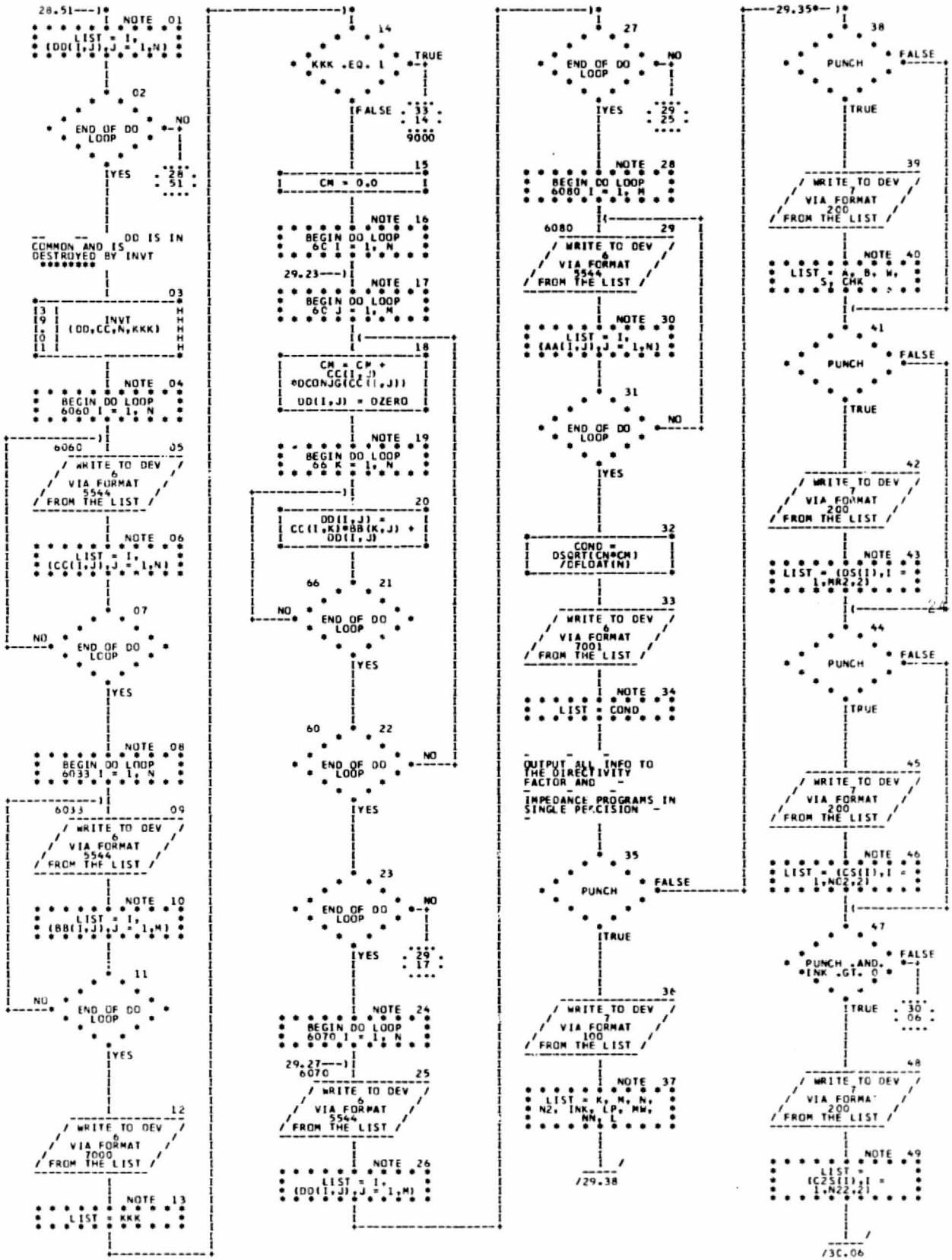
NOTE 01
LIST = I, (DD(I,J),J = 1,N)
02
END OF DO LOOP
NO
YES
DD IS IN COMMON AND IS DESTROYED BY INVT
03
INVT (DD,CC,N,KKK)
NOTE 04
BEGIN DO LOOP 6060 I = 1, N
6060
05
WRITE TO DEV 6 VIA FORMAT 5544 FROM THE LIST
NOTE 06
LIST = I, (CC(I,J),J = 1,N)
07
END OF DO LOOP
NO
YES
NOTE 08
BEGIN DO LOOP 6033 I = 1, N
6033
09
WRITE TO DEV 6 VIA FORMAT 5544 FROM THE LIST
NOTE 10
LIST = I, (BB(I,J),J = 1,M)
11
END OF DO LOOP
NO
YES
12
WRITE TO DEV 6 VIA FORMAT 7000 FROM THE LIST
NOTE 13
LIST = KKK
14
KKK .EQ. 1
TRUE
FALSE
9000
15
CM = 0.0
NOTE 16
BEGIN DO LOOP 6C I = 1, N
29.23
NOTE 17
BEGIN DO LOOP 6C J = 1, N
18
CM = CM + CC(I,J) *DCONJG(CC(I,J))
DD(I,J) = DZERO
NOTE 19
BEGIN DO LOOP 66 K = 1, N
20
DD(I,J) = CC(I,K)*BB(K,J) + DD(I,J)
66
21
END OF DO LOOP
NO
YES
60
22
END OF DO LOOP
NO
YES
23
END OF DO LOOP
NO
YES
9000
NOTE 24
BEGIN DO LOOP 6070 I = 1, N
29.27
6070
25
WRITE TO DEV 6 VIA FORMAT 5544 FROM THE LIST
NOTE 26
LIST = I, (DD(I,J),J = 1,M)
27
END OF DO LOOP
NO
YES
9000
NOTE 28
BEGIN DO LOOP 6080 I = 1, M
6080
29
WRITE TO DEV 6 VIA FORMAT 5544 FROM THE LIST
NOTE 30
LIST = I, (AA(I,J),J = 1,N)
31
END OF DO LOOP
NO
YES
32
COND = DSQRT(CM*CM) /DFLOAT(N)
33
WRITE TO DEV 6 VIA FORMAT 7001 FROM THE LIST
NOTE 34
LIST = COND
OUTPUT ALL INFO TO THE DIRECTIVITY FACTOR AND IMPEDANCE PROGRAMS IN SINGLE PRECISION
35
PUNCH
FALSE
TRUE
36
WRITE TO DEV 7 VIA FORMAT 100 FROM THE LIST
NOTE 37
LIST = K, M, N, N2, INK, LP, MW, NN, L
/29.38
29.35
38
PUNCH
FALSE
TRUE
39
WRITE TO DEV 7 VIA FORMAT 200 FROM THE LIST
NOTE 40
LIST = A, B, M, S, CHK
41
PUNCH
FALSE
TRUE
42
WRITE TO DEV 7 VIA FORMAT 200 FROM THE LIST
NOTE 43
LIST = (DS(I),I = 1,MR2,2)
44
PUNCH
FALSE
TRUE
45
WRITE TO DEV 7 VIA FORMAT 200 FROM THE LIST
NOTE 46
LIST = (CS(I),I = 1,NC2,2)
47
PUNCH .AND. INK .GT. 0
FALSE
TRUE
48
WRITE TO DEV 7 VIA FORMAT 200 FROM THE LIST
NOTE 49
LIST = (C2S(I),I = 1,N22,2)
/3C.06

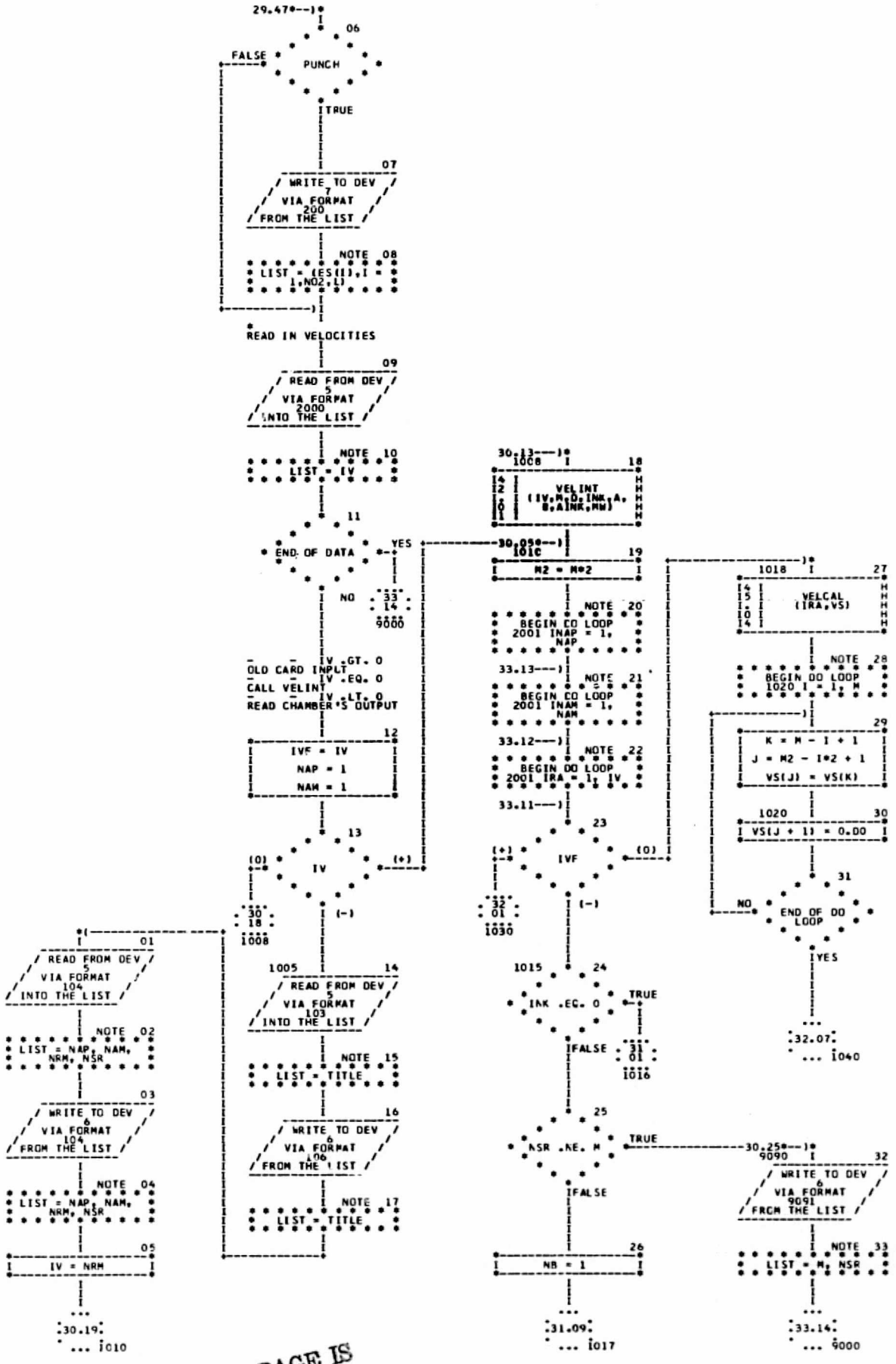

ORIGINAL PAGE IS
OF POOR QUALITY

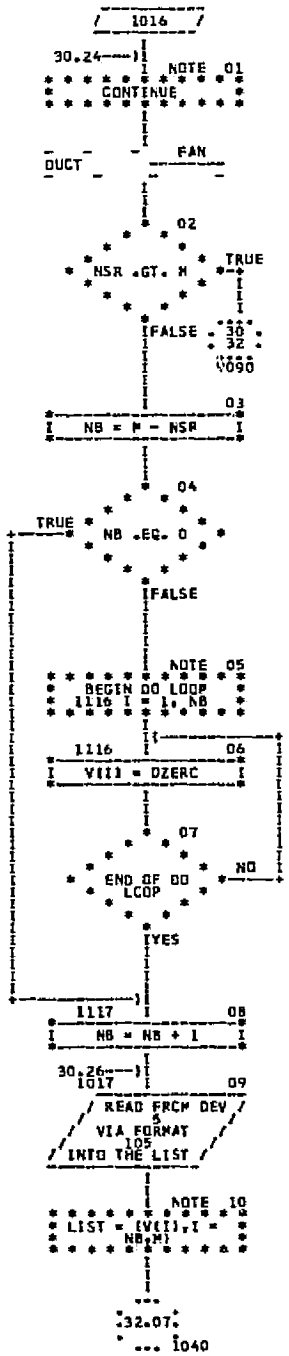
1016
30.24
NOTE 01
CONTINUE
DUCT
FAN
02
NSR .GT. M
TRUE
FALSE
30
32
0090
03
NB = M - NSR
04
TRUE
NB .EQ. 0
FALSE
NOTE 05
BEGIN DO LOOP
1116 I = 1, NB
1116
06
VIII = DZERC
07
END OF DO LOOP
NO
YES
1117
08
NB = NB + 1
30.26
1017
09
READ FROM DEV
5
VIA FORMAT
105
INTO THE LIST
NOTE 10
LIST = (V(I),I =
NB,M)
32.07
1040

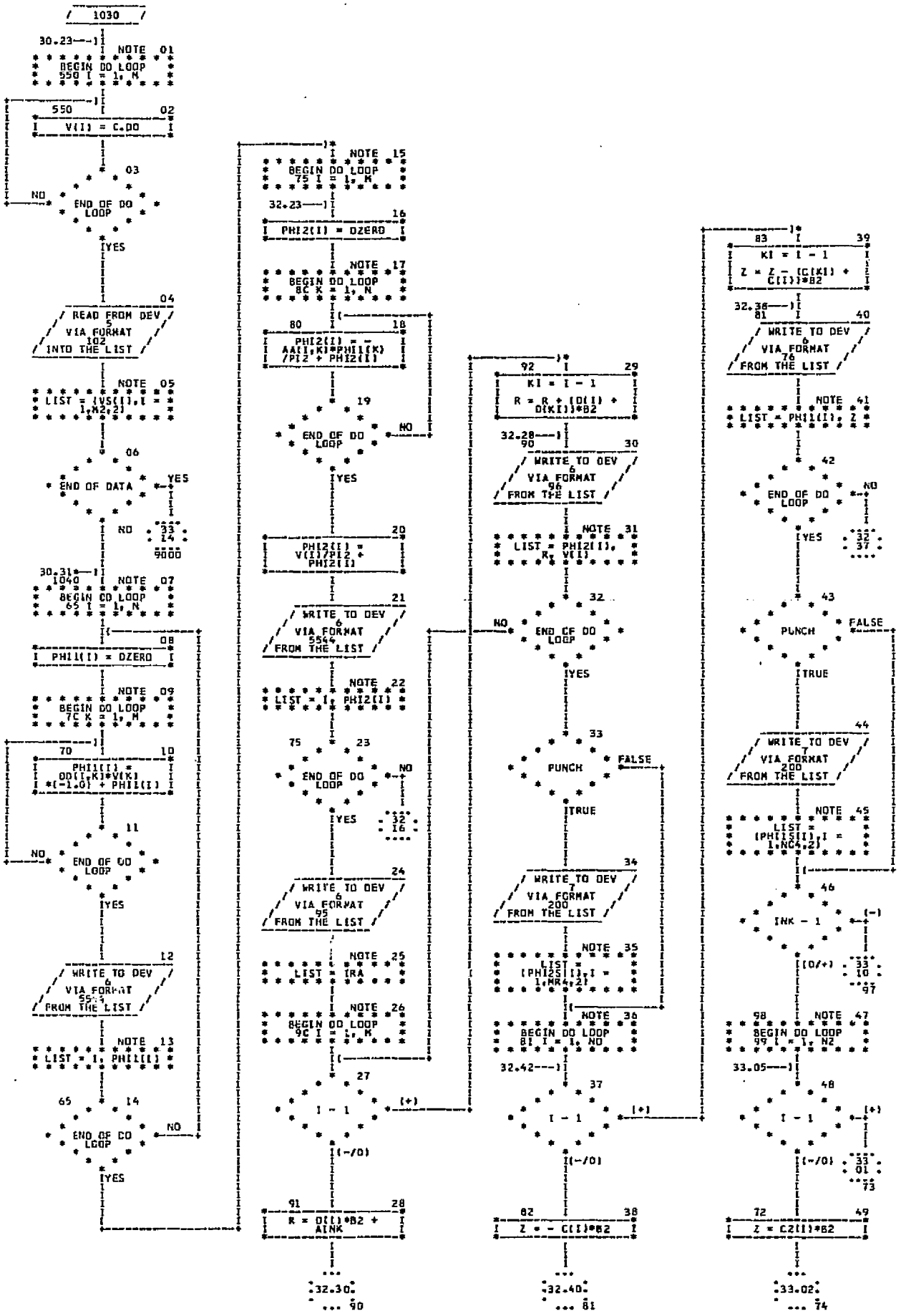
1030
30.23
NOTE 01
BEGIN DO LOOP
550 I = 1, M
550
02
V(I) = C.DO
03
END OF DO LOOP
NO
YES
04
READ FROM DEV 5
VIA FORMAT 102
INTO THE LIST
NOTE 05
LIST = (VS(I),I = 1,M2,2)
06
END OF DATA
YES
NO
33
14
9000
30.31
1040
NOTE 07
BEGIN DO LOOP
65 I = 1, N
08
PHI1(I) = DZERO
NOTE 09
BEGIN DO LOOP
7C K = 1, M
70
10
PHI1(I) = DD(I,K)*V(K) *(-1.0) + PHI1(I)
11
END OF DO LOOP
NO
YES
12
WRITE TO DEV 6
VIA FORMAT 55
FROM THE LIST
NOTE 13
LIST = I, PHI1(I)
65
14
END OF DO LOOP
NO
YES
NOTE 15
BEGIN DO LOOP
75 I = 1, M
32.23
16
PHI2(I) = DZERO
NOTE 17
BEGIN DO LOOP
8C K = 1, N
80
18
PHI2(I) = AA(I,K)*PHI1(K) /PI2 + PHI2(I)
19
END OF DO LOOP
NO
YES
20
PHI2(I) = V(I)/PI2 + PHI2(I)
21
WRITE TO DEV 6
VIA FORMAT 5544
FROM THE LIST
NOTE 22
LIST = I, PHI2(I)
75
23
END OF DO LOOP
NO
YES
33
16
24
WRITE TO DEV 6
VIA FORMAT 55
FROM THE LIST
NOTE 25
LIST = IRA
NOTE 26
BEGIN DO LOOP
9C I = 1, M
27
I - 1
(+)
(-/0)
91
28
R = D(I)*B2 + AINK
32.30
90
92
29
KI = I - 1
R = R + (D(I) + D(KI))*B2
32.28
90
30
WRITE TO DEV 6
VIA FORMAT 96
FROM THE LIST
NOTE 31
LIST = PHI2(I), R, V(I)
32
END OF DO LOOP
NO
YES
33
PUNCH
FALSE
TRUE
34
WRITE TO DEV 7
VIA FORMAT 200
FROM THE LIST
NOTE 35
LIST = (PHI2S(I),I = 1,NR4,2)
NOTE 36
BEGIN DO LOOP
81 I = 1, NO
32.42
37
I - 1
(+)
(-/0)
82
38
Z = - C(I)*B2
32.40
81
83
39
KI = I - 1
Z = Z - (C(KI) + C(I))*B2
32.36
81
40
WRITE TO DEV 6
VIA FORMAT 76
FROM THE LIST
NOTE 41
LIST = PHI1(I), Z
42
END OF DO LOOP
NO
YES
32
37
43
PUNCH
FALSE
TRUE
44
WRITE TO DEV 7
VIA FORMAT 200
FROM THE LIST
NOTE 45
LIST = (PHI1S(I),I = 1,NC4,2)
46
INK - 1
(-)
(0/+)
33
10
97
98
NOTE 47
BEGIN DO LOOP
99 I = 1, N2
33.05
48
I - 1
(+)
(-/0)
33
01
73
72
49
Z = C2(I)*B2
33.02
74

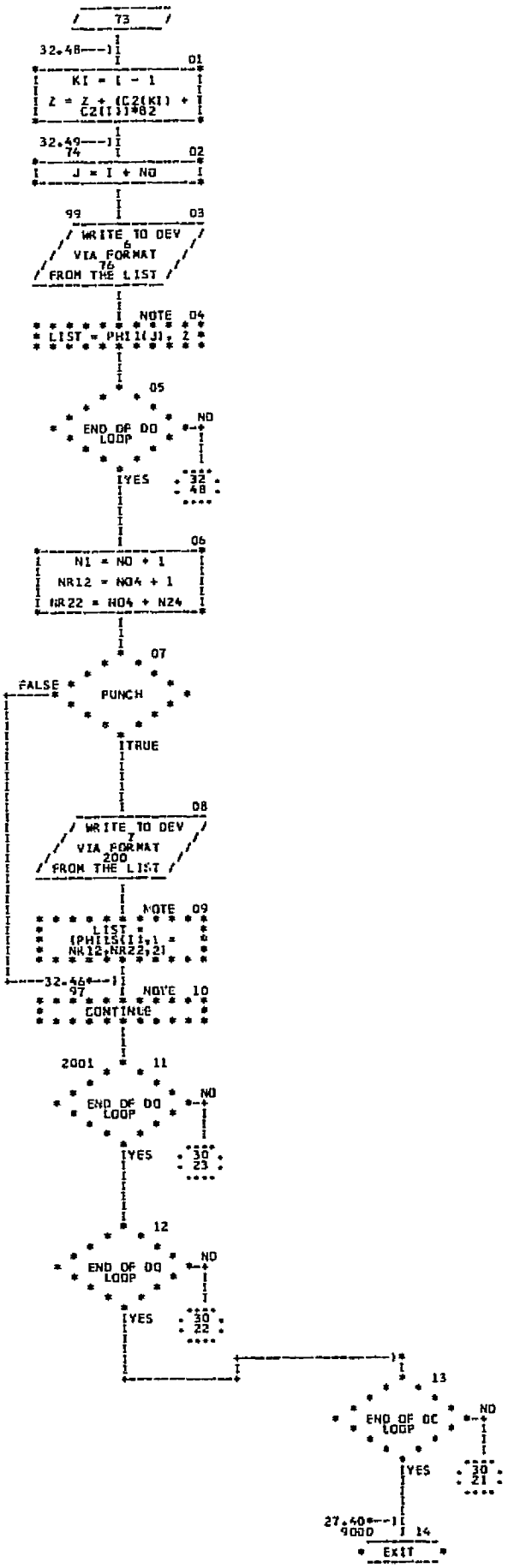
73
32.48
01
KI = I - 1
Z = Z + (C2(KI) + C2(I))*B2
32.49
74
02
J = I + NO
99
03
WRITE TO DEV 6
VIA FORMAT 76
FROM THE LIST
NOTE 04
LIST = PHI1(J), Z
05
END OF DO LOOP
NO
YES
32.48
06
N1 = NO + 1
NR12 = NO4 + 1
NR22 = NO4 + N24
07
PUNCH
FALSE
TRUE
08
WRITE TO DEV 7
VIA FORMAT 200
FROM THE LIST
NOTE 09
LIST = (PHI1S(I1,1), NR12,NR22,2)
32.46
97
NOTE 10
CONTINUE
2001
11
END OF DO LOOP
NO
YES
30.23
12
END OF DO LOOP
NO
YES
30.22
13
END OF DO LOOP
NO
YES
30.21
27.40
9000
14
EXIT

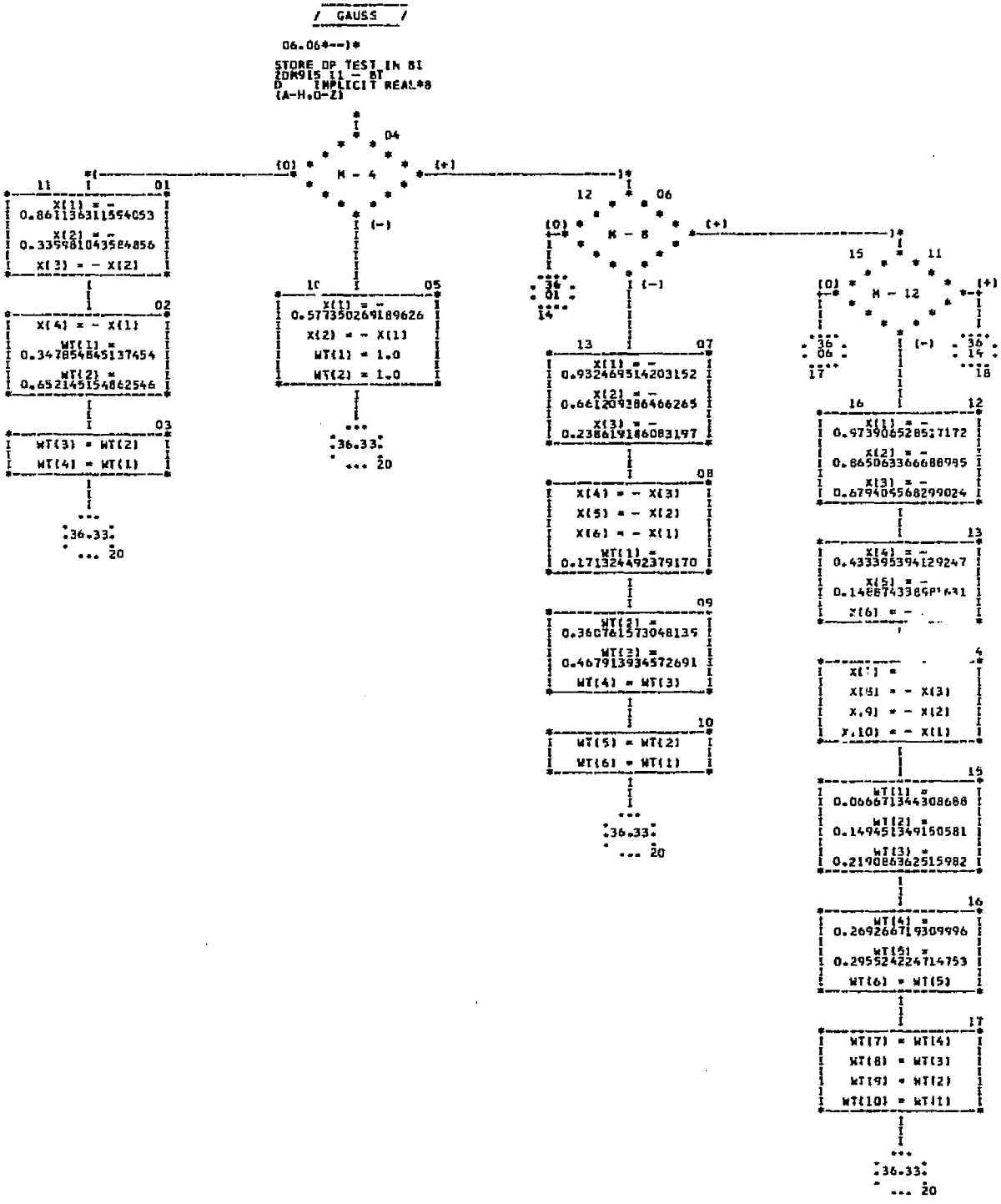
/ GAUSS /
06.064--)*
STORE OP TEST IN 81
ZDR915 11 - 81
D IMPLICIT REAL*8
(A-H,O-Z)
04
N - 4
(0)
(+)
(-)
11
01
X(1) = -
0.861136311594053
X(2) = -
0.339981043584856
X(3) = - X(2)
02
X(4) = - X(1)
WT(1) =
0.347854845137454
WT(2) =
0.652145154862546
03
WT(3) = WT(2)
WT(4) = WT(1)
10
05
X(1) = -
0.577350269189626
X(2) = - X(1)
WT(1) = 1.0
WT(2) = 1.0
:36.33:
... 20
12
06
N - 8
14
13
07
X(1) = -
0.932469514203152
X(2) = -
0.661209386466265
X(3) = -
0.238619186083197
08
X(4) = - X(3)
X(5) = - X(2)
X(6) = - X(1)
WT(1) =
0.171324492379170
09
WT(2) =
0.360761573048139
WT(3) =
0.467913934572691
WT(4) = WT(3)
10
WT(5) = WT(2)
WT(6) = WT(1)
15
11
N - 12
17
16
12
X(1) = -
0.973906528517172
X(2) = -
0.865063366688985
X(3) = -
0.679409568299024
13
X(4) = -
0.433395394129247
X(5) = -
0.148874338681631
X(6) = -
4
X(7) =
X(8) = - X(3)
X(9) = - X(2)
X(10) = - X(1)
15
WT(1) =
0.066671344308688
WT(2) =
0.149451349150581
WT(3) =
0.219086362515982
16
WT(4) =
0.269266719309996
WT(5) =
0.295524224714753
WT(6) = WT(5)
17
WT(7) = WT(4)
WT(8) = WT(3)
WT(9) = WT(2)
WT(10) = WT(1)

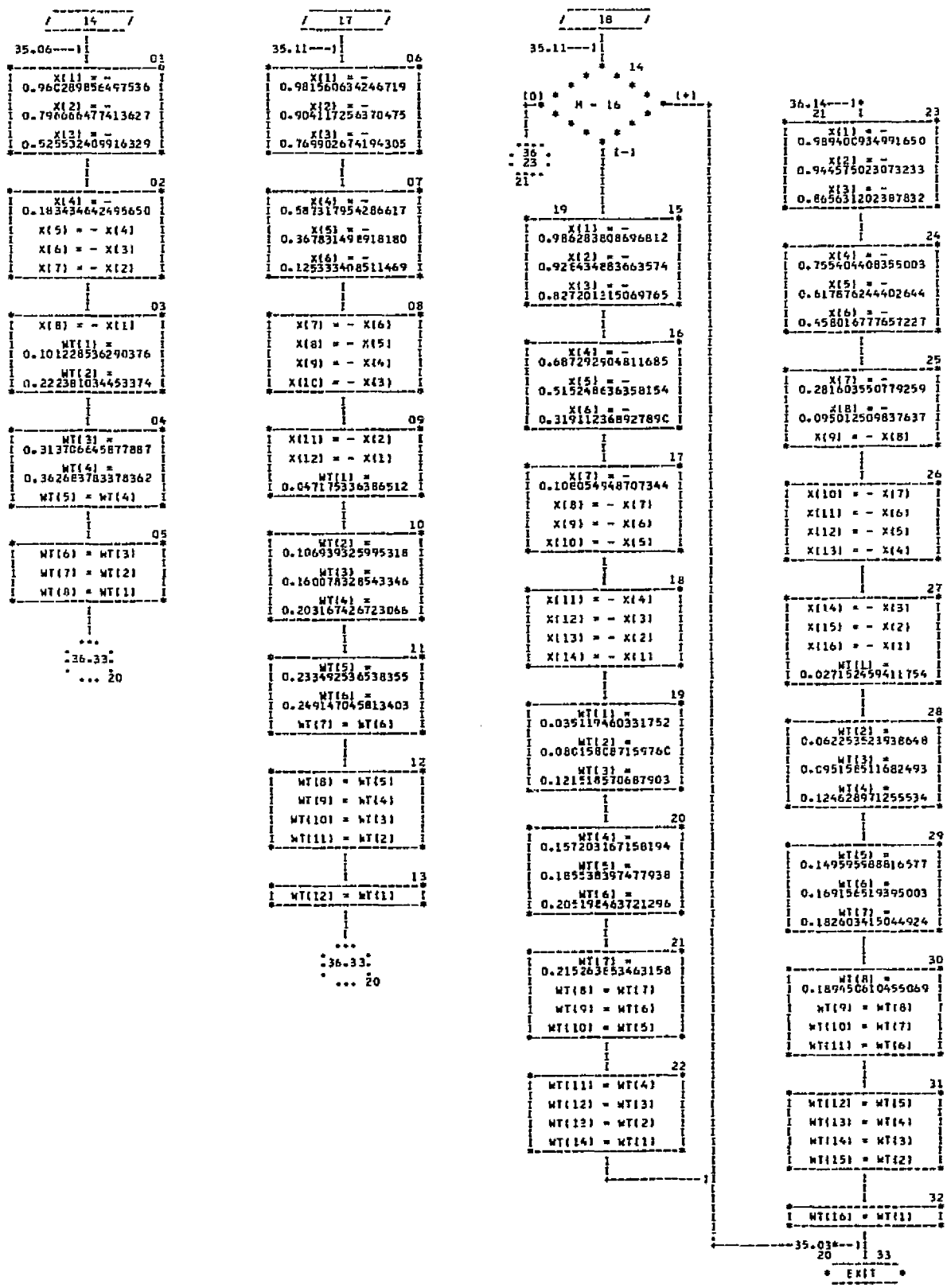
14
35.06
01
X(1) = -
0.960289856497536
X(2) = -
0.796666477413627
X(3) = -
0.525532409916329
02
X(4) = -
0.183434642495650
X(5) = - X(4)
X(6) = - X(3)
X(7) = - X(2)
03
X(8) = - X(1)
WT(1) =
0.101228536290376
WT(2) =
0.222381034453374
04
WT(3) =
0.313706645877887
WT(4) =
0.362683783378362
WT(5) = WT(4)
05
WT(6) = WT(3)
WT(7) = WT(2)
WT(8) = WT(1)
36.33
20
17
35.11
06
X(1) = -
0.981560634246719
X(2) = -
0.904117256370475
X(3) = -
0.769902674194305
07
X(4) = -
0.587317954286617
X(5) = -
0.367831498918180
X(6) = -
0.125333408511469
08
X(7) = - X(6)
X(8) = - X(5)
X(9) = - X(4)
X(10) = - X(3)
09
X(11) = - X(2)
X(12) = - X(1)
WT(1) =
0.047175336386512
10
WT(2) =
0.106939325995318
WT(3) =
0.160078328543346
WT(4) =
0.203167426723066
11
WT(5) =
0.233492536538355
WT(6) =
0.249147045813403
WT(7) = WT(6)
12
WT(8) = WT(5)
WT(9) = WT(4)
WT(10) = WT(3)
WT(11) = WT(2)
13
WT(12) = WT(1)
36.33
20
18
35.11
14
M - 16
(0)
(+)
(-)
36
23
21
19
15
X(1) = -
0.986283808696812
X(2) = -
0.926434883663574
X(3) = -
0.827201315069765
16
X(4) = -
0.687292904811685
X(5) = -
0.515248636358154
X(6) = -
0.319112368927890
17
X(7) = -
0.108054948707344
X(8) = - X(7)
X(9) = - X(6)
X(10) = - X(5)
18
X(11) = - X(4)
X(12) = - X(3)
X(13) = - X(2)
X(14) = - X(1)
19
WT(1) =
0.035119460331752
WT(2) =
0.080158087159760
WT(3) =
0.121518570687903
20
WT(4) =
0.157203167158194
WT(5) =
0.185538397477938
WT(6) =
0.205198463721296
21
WT(7) =
0.215263853463158
WT(8) = WT(7)
WT(9) = WT(6)
WT(10) = WT(5)
22
WT(11) = WT(4)
WT(12) = WT(3)
WT(13) = WT(2)
WT(14) = WT(1)
36.14
21
23
X(1) = -
0.989400934991650
X(2) = -
0.944575023073233
X(3) = -
0.865631202387832
24
X(4) = -
0.755404408355003
X(5) = -
0.617876244402644
X(6) = -
0.458016777657227
25
X(7) = -
0.281603550779259
X(8) = -
0.095012509837637
X(9) = - X(8)
26
X(10) = - X(7)
X(11) = - X(6)
X(12) = - X(5)
X(13) = - X(4)
27
X(14) = - X(3)
X(15) = - X(2)
X(16) = - X(1)
WT(1) =
0.027152459411754
28
WT(2) =
0.062253523938648
WT(3) =
0.095158511682493
WT(4) =
0.124628971255534
29
WT(5) =
0.149595988816577
WT(6) =
0.169156519395003
WT(7) =
0.182603415044924
30
WT(8) =
0.189450610455069
WT(9) = WT(8)
WT(10) = WT(7)
WT(11) = WT(6)
31
WT(12) = WT(5)
WT(13) = WT(4)
WT(14) = WT(3)
WT(15) = WT(2)
32
WT(16) = WT(1)
35.03
20
33
EXIT

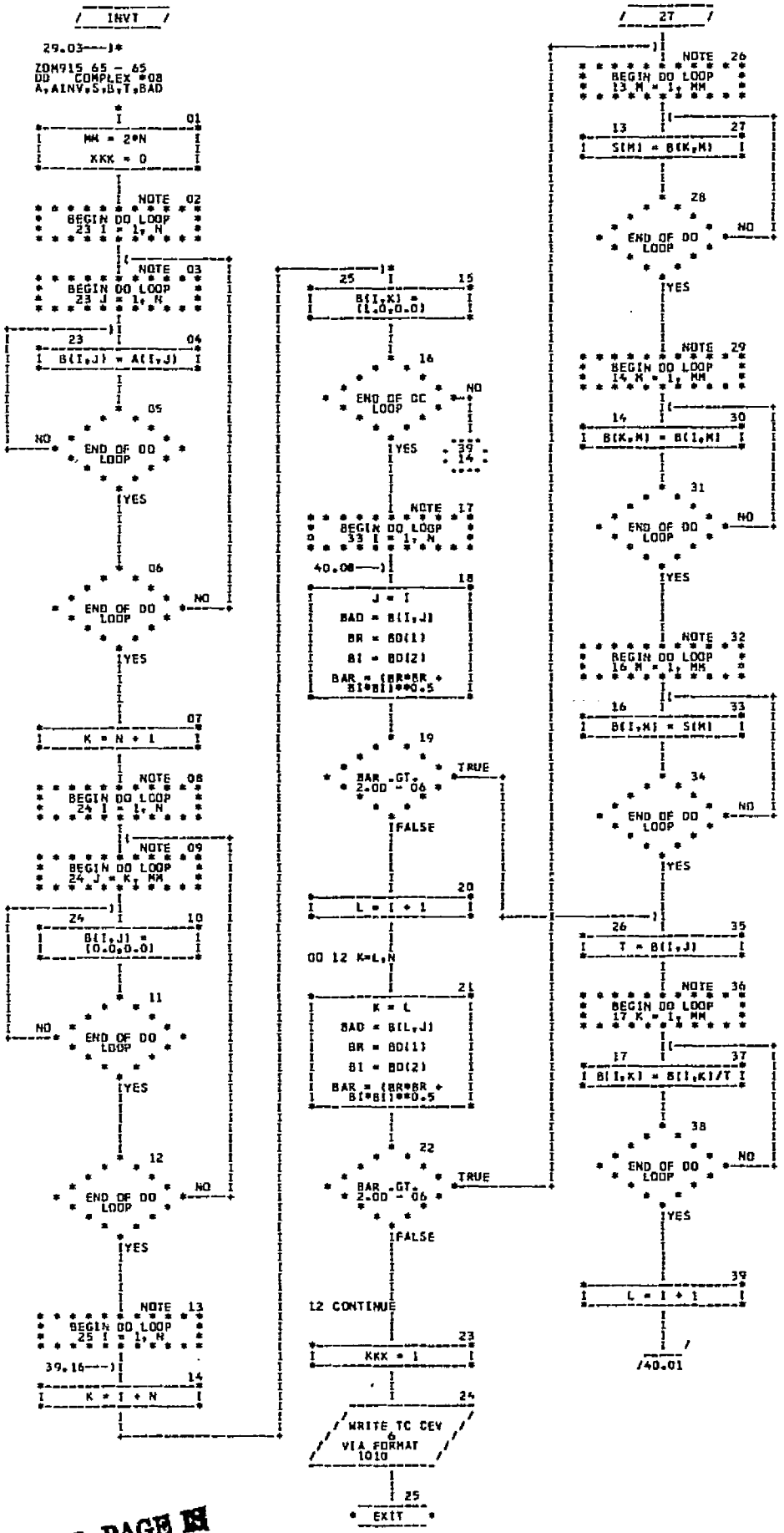

ORIGINAL PAGE IS OF POOR QUALITY

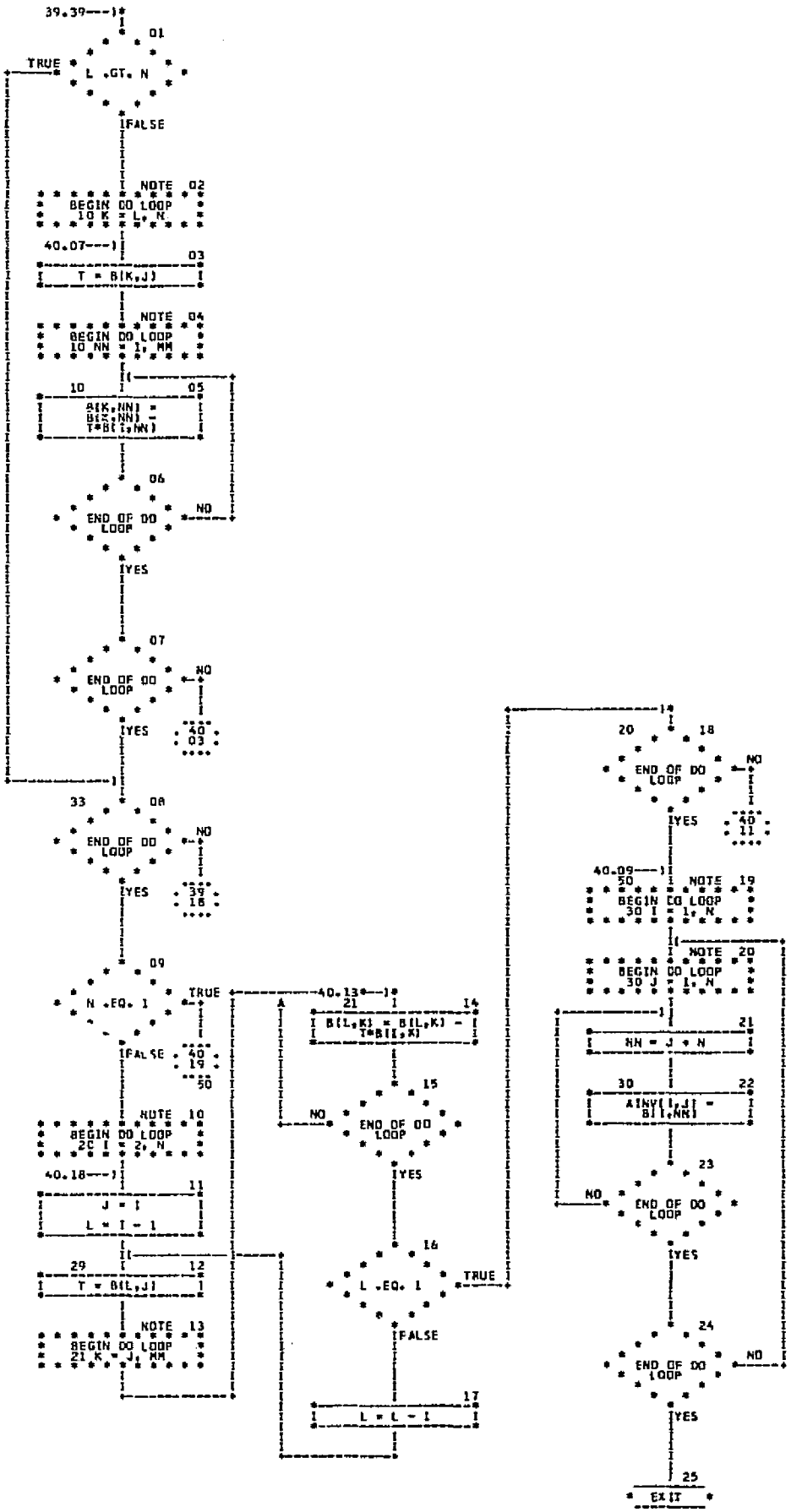
39.39
01
TRUE
L .GT. N
FALSE
NOTE 02
BEGIN DO LOOP
10 K = L, N
40.07
03
T = B(K,J)
NOTE 04
BEGIN DO LOOP
10 NN = 1, MM
10
05
A(K,NN) =
B(K,NN) -
T*B(I,NN)
06
END OF DO LOOP
NO
YES
07
END OF DO LOOP
NO
YES
40
03
08
END OF DO LOOP
NO
YES
39
18
09
N .EQ. 1
TRUE
FALSE
40
19
50
NOTE 10
BEGIN DO LOOP
20 I = 2, N
40.18
11
J = I
L = I - 1
29
12
T = B(L,J)
NOTE 13
BEGIN DO LOOP
21 K = J, MM
40.13
A
21
14
B(I,K) = B(L,K) -
T*B(I,K)
15
NO
END OF DO LOOP
YES
16
L .EQ. 1
TRUE
FALSE
17
L = L - 1
20
18
END OF DO LOOP
NO
YES
40
11
40.09
50
NOTE 19
BEGIN DO LOOP
30 I = 1, N
NOTE 20
BEGIN DO LOOP
30 J = 1, N
21
NN = J + N
30
22
AINV(I,J) -
B(I,NN)
23
NO
END OF DO LOOP
YES
24
END OF DO LOOP
NO
YES
25
EXIT

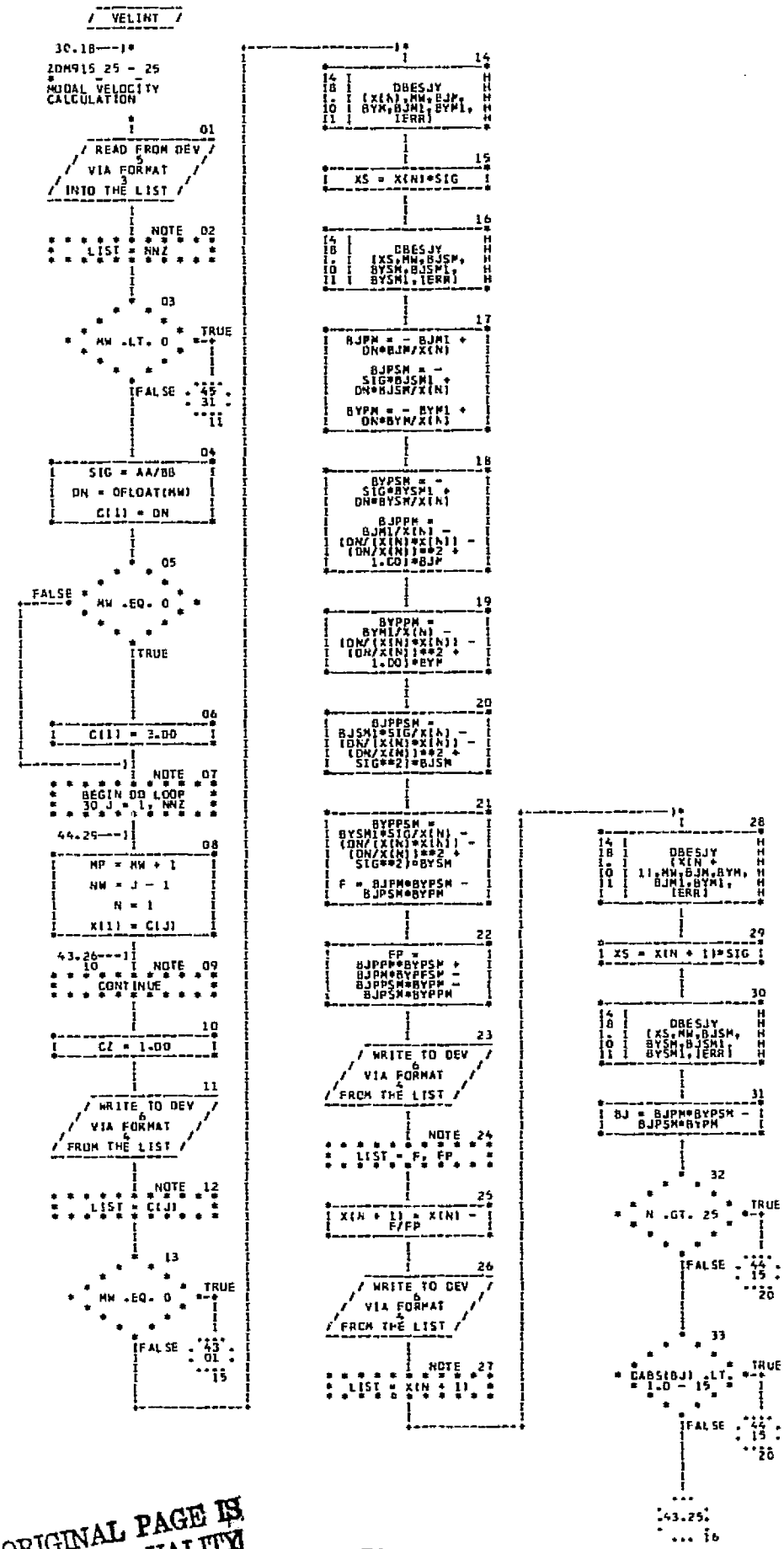

ORIGINAL PAGE IS OF POOR QUALITY

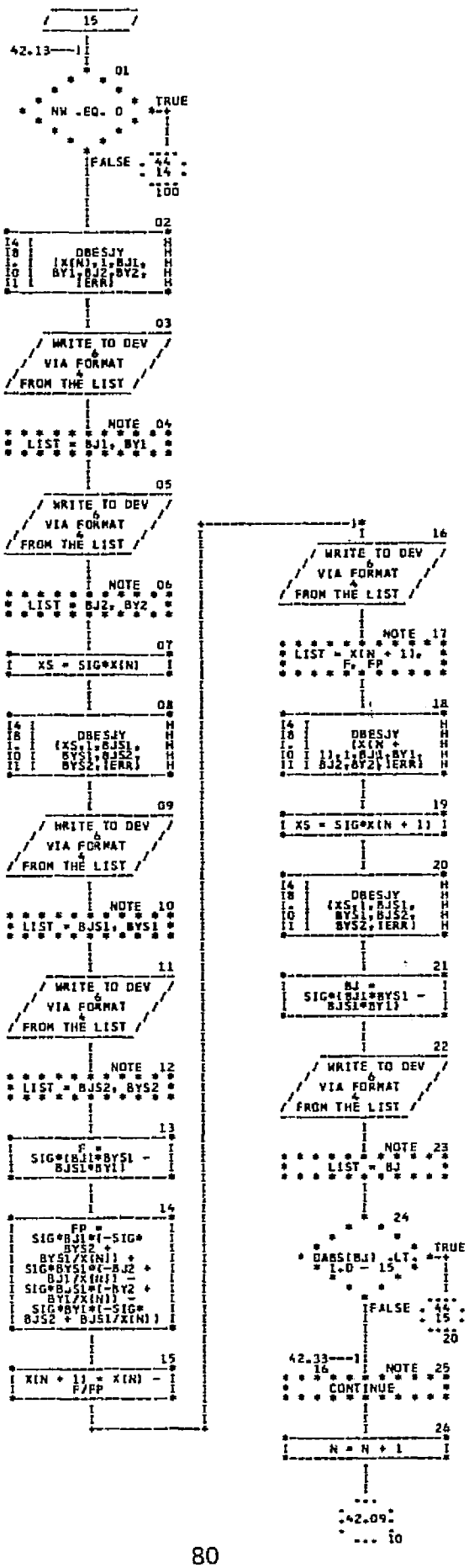
15
42.13
01
NN .EQ. 0
TRUE
FALSE
44
14
100
02
DBESJY
(X(N),1,BJ1,
BY1,BJ2,BY2,
IERR)
03
WRITE TO DEV
VIA FORMAT
FROM THE LIST
NOTE 04
LIST = BJ1, BY1
05
WRITE TO DEV
VIA FORMAT
FROM THE LIST
NOTE 06
LIST = BJ2, BY2
07
XS = SIG*X(N)
08
DBESJY
(XS,1,BJS1,
BYS1,BJS2,
BYS2,IERR)
09
WRITE TO DEV
VIA FORMAT
FROM THE LIST
NOTE 10
LIST = BJS1, BYS1
11
WRITE TO DEV
VIA FORMAT
FROM THE LIST
NOTE 12
LIST = BJS2, BYS2
13
F =
SIG*(BJ1*BYS1 -
BJS1*BY1)
14
FP =
SIG*BJ1*(-SIG*
BYS2 +
BYS1/X(N)) +
SIG*BYS1*(-BJ2 +
BJ1/X(N)) -
SIG*BJS1*(-BY2 +
BY1/X(N)) -
SIG*BY1*(-SIG*
BJS2 + BJS1/X(N))
15
X(N + 1) = X(N) -
F/FP
16
WRITE TO DEV
VIA FORMAT
FROM THE LIST
NOTE 17
LIST = X(N + 1),
F, FP
18
DBESJY
(X(N +
1),1,BJ1,BY1,
BJ2,BY2,IERR)
19
XS = SIG*X(N + 1)
20
DBESJY
(XS,1,BJS1,
BYS1,BJS2,
BYS2,IERR)
21
BJ =
SIG*(BJ1*BYS1 -
BJS1*BY1)
22
WRITE TO DEV
VIA FORMAT
FROM THE LIST
NOTE 23
LIST = BJ
24
DABS(BJ) .LT.
1.D - 15
TRUE
FALSE
44
15
20
42.33
16
NOTE 25
CONTINUE
26
N = N + 1
42.09
10

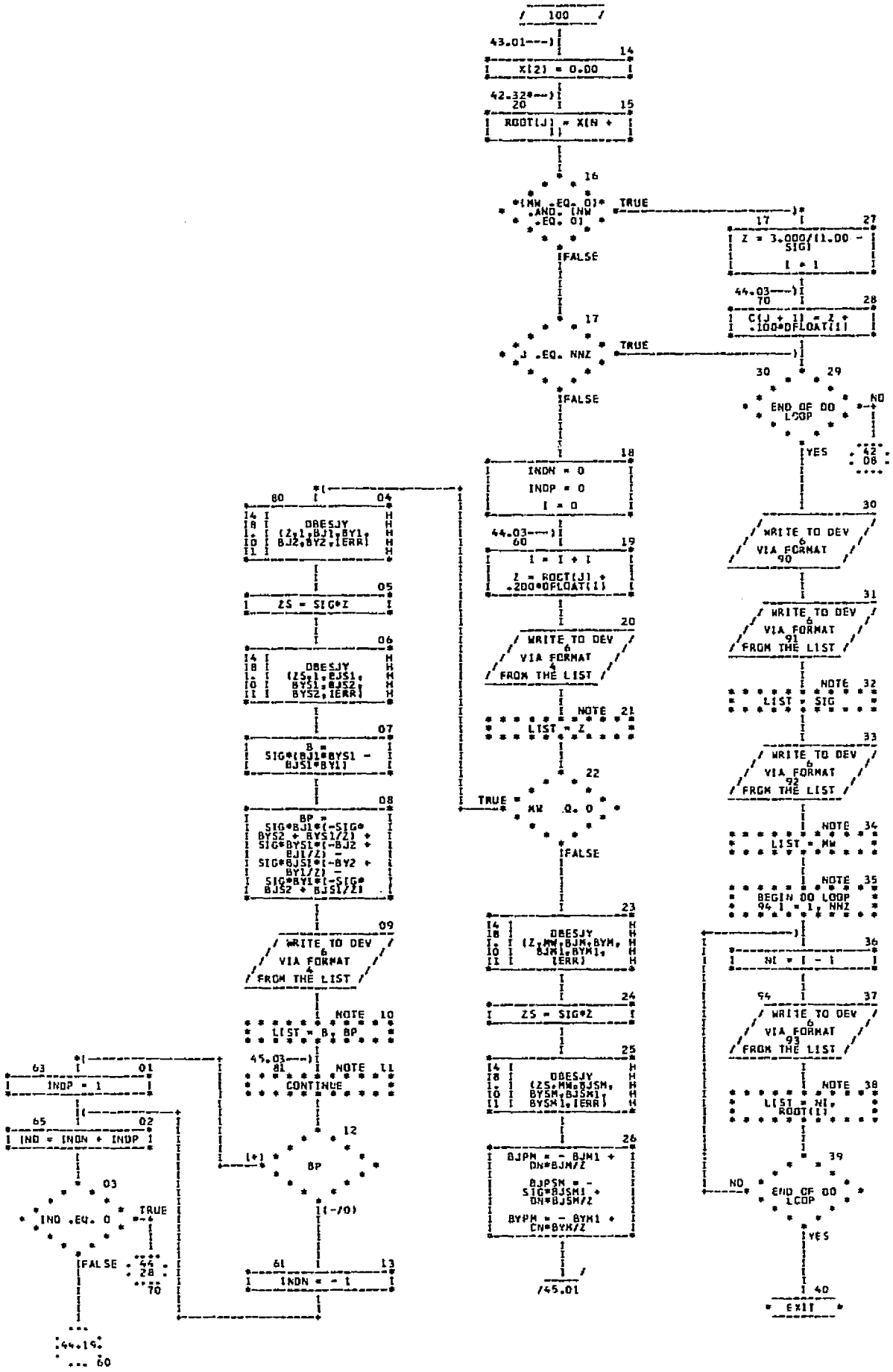

ORIGINAL PAGE IS
OF POOR QUALITY

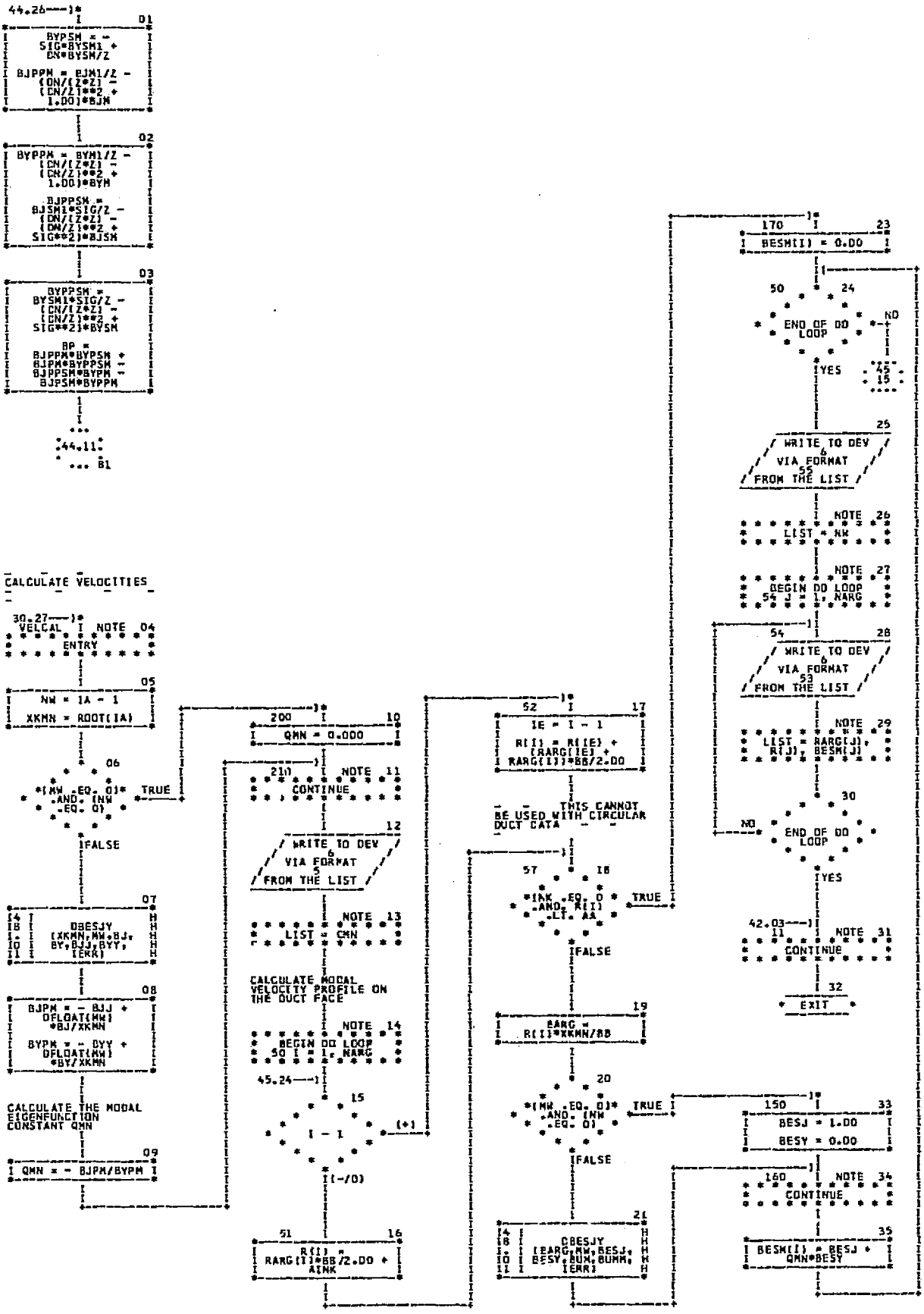
CALCULATE VELOCITIES
VELCAL
ENTRY
NOTE 04
NW = IA - 1
XKMN = ROOT(IA)
IF(NW .EQ. 0)* .AND. (NW .EQ. 0)
TRUE
FALSE
DBESJY (XKMN,NW,BJ, BY,BJJ,BYY, IERR)
BJPM = - BJJ + DFLOAT(NW) *BJ/XKMN
BYPM = - BYY + DFLOAT(NW) *BY/XKMN
CALCULATE THE MODAL EIGENFUNCTION CONSTANT QMN
QMN = - BJPM/BYPM
BYPSM = - S[0*BYSM1 + BN*BYSM/Z
BJPPM = BJM1/Z - (BN/(Z*Z) - (BN/Z)**2 + 1.00)*BJM
BYPPM = BYM1/Z - (BN/(Z*Z) - (BN/Z)**2 + 1.00)*BYM
BJPPSM = BJSM1*SIG/Z - (BN/(Z*Z) - (BN/Z)**2 + SIG**2)*BJSM
BYPPSM = BYSM1*SIG/Z - (BN/(Z*Z) - (BN/Z)**2 + SIG**2)*BYSM
B0 = BJPPM*BYPSM + BJPM*BYPPSM - BJPPSM*BYPM - BJPSM*BYPPM
44.26
44.11
81
200
QMN = 0.000
21
CONTINUE
WRITE TO DEV 6 VIA FORMAT 5 FROM THE LIST
LIST = QMN
CALCULATE MODAL VELOCITY PROFILE ON THE DUCT FACE
BEGIN DO LOOP 50 I = 1, NARG
45.24
I - 1
(+)
(-/0)
R(I) = RARG(I)*BB/2.00 + AINK
52
IE = I - 1
R(I) = R(IE) + (RARG(IE) + RARG(I))*BB/2.00
THIS CANNOT BE USED WITH CIRCULAR DUCT DATA
IF(INK .EQ. 0 .AND. R(I) .LT. AA)
RARG = R(I)*XKMN/BB
DBESJY (RARG,NW,BESJ, BESY,BJM,BYMM, IERR)
170
BESM(I) = 0.00
END OF DO LOOP
YES
NO
45
15
WRITE TO DEV 6 VIA FORMAT 55 FROM THE LIST
LIST = NK
BEGIN DO LOOP 54 J = 1, NARG
WRITE TO DEV 6 VIA FORMAT 53 FROM THE LIST
LIST = RARG(J), R(J), BESM(J)
42.03
CONTINUE
EXIT
IF(NW .EQ. 0)* .AND. (NW .EQ. 0)
150
BESJ = 1.00
BESY = 0.00
160
CONTINUE
BESM(I) = BESJ + QMN*BESY

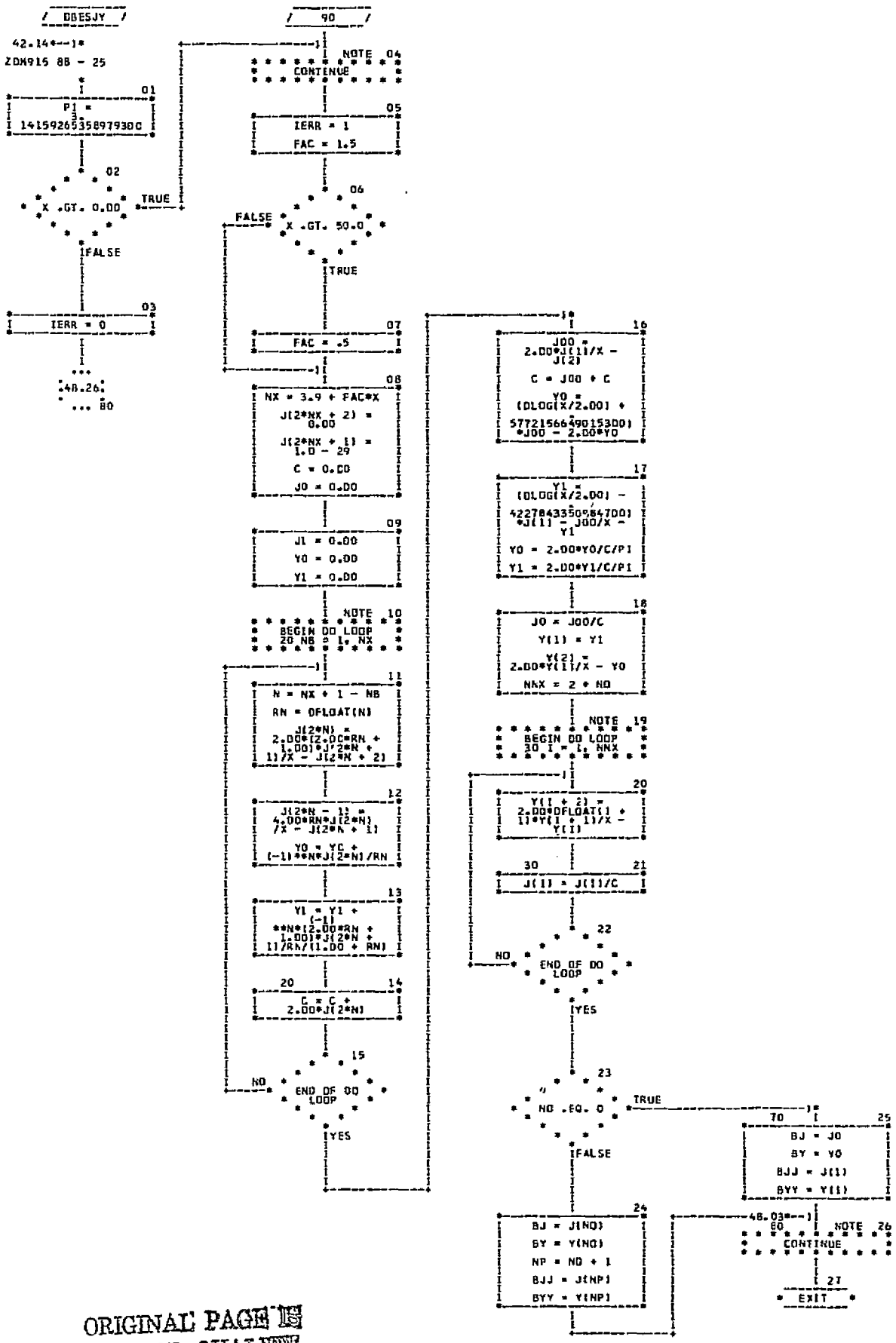

ORIGINAL PAGE IS
OF POOR QUALITY

APPENDIX 3

MAIN PROGRAM LISTING

PRECEDING PAGE BLANK NOT FILMED

```
C          BOX METHOD INTEGRATION FOR SOURCE DISTRIBUTION OVER DUCT
C                                                          ZDM915 61 - 61
      LOGICAL * 1  PUNCH/T/ ,OLD/F/
      INTEGER *4   TITLC/'-Z'/,  TITLED/'R'/ ,DRECTP/02/ ,TITLE(18)
     1    ,SAVTP/03/ ,TITLC2/'+Z'/ ,MAXD/60/
      REAL *4  ZERO/0.0/
      DIMENSION C(40),D(40)       ,BR(60,60)         ,BI(60,60)
     1                          ,E(40) ,C2(40)
      COMMON   /GAUS/
     1              BSQ, WDS, ZL, RL, ASQ ,DT1, DT2
     2                   ,ICN
      COMMON   /MATGUS/          B2, AINK, PI2, C, D, A, B, CHK ,C2
C   -    -    DUMMY IN SO COMMON'S WILL AGREE SIZE WISE   -   -   -
     1  ,INK, N, M, MW, LP, L, NN,N2
      COMMON /SAV1/      BR,BI
  100 FORMAT(30I2)
  101 FORMAT(7F10.3)
  103 FORMAT (18A4)
  106 FORMAT ('0', 5X, 'BLOCK SIZE IN THE ',A2, ' DIRECTION NORMALIZED',
     1     ' WITH RESPECT TO B.'  /(8X,4E15.4))
  150 FORMAT(1H1,5X,'BOX METHOD INTEGRATION FOR SOURCE DISTRIBUTION OVER
     1 DUCT',// 6X, 18A4
     2        // 6X,'DUCT OR = ',F10.4,' FT  ',3X,'DUCT IR =',F10.4,' FT
     3',/,5X,'FREQUENCY =',F10.4,' RAD/SEC',5X,'SOUND SPEED =',F10.4,2X,
     4'FT/SEC',/,5X,'MODE NUMBER =',I3,//)
      NAMELIST /PRNT1/ L,M,N,NN,LP
      NAMELIST/ PRNT2/ N2,INK,CHK,        XANG
      NAMELIST  /READ/   PUNCH ,OLD
C  *   - * -  * -   * -  * -  * -  * -  * -  * -  * -  *
      READ  (5,103 ,END=2)  TITLE
      OLD = .FALSE.
      READ (5,READ)
        IF (OLD)                                        GO TO 75
    1 READ(5,100 ,END=2)   L, M, N, NN, LP, MW, INK, K ,N2
        IF (L .LE. 0)                                    GO TO 2
        IF (M+N+N2 .GT. MAXD)                            GO TO 7000
      READ(5,101) A,B,W,S,CHK      ,XANG
      WRITE(6,150)    TITLE, B, A, W, S, MW
      WRITE(6,PRNT1)
      WRITE(6,PRNT2)
      READ(5,101) (C(I), I=1,N)
      WRITE (6,106)  TITLC  ,(C(I),I=1,N)
        IF (INK .LT. 1)                              GO TO 3197
      READ(5,101)(C2(I), I=1,N2)
                          WRITE (6,106)  TITLC2, (C2(I),I=1,N2)
 3197 READ(5,101) (D(I), I=1,M)
      WRITE (6,106)  TITLED ,(D(I),I=1,M)
C
C                 INITIAL CALCULATIONS
      PI=3.14159265358979
      E(1) = XANG
```

```
      DT2 =        (1.0E0 - XANG)       / (L-1)
          DO  50 I=2,L
   50 E(I) = DT2
      DT1 = XANG * PI * 2.0
      DT2 =  2.0* (1.0E0 - XANG) * PI / (L-1)
      ICN=0
      PI2 = PI * 2
      B2 = B / 2.0
      BSQ = B * B
      WDS = W / S
      ASQ = A * A.
      AINK = A * INK
      CALL CAL200
      CALL CAL300
        IF (INK .GE. 1)         CALL CAL700
C   -    - -    -  PAD WITH ZEROES SO THEY MAY BE READ IN REAL *8     -
 7000 WRITE  (SAVTP)  INK, N, M, MW, LP, L, NN, K ,N2
     1      ,B2,ZERO, AINK,ZERO, PI2,ZERO, A,ZERO, B,ZERO, CHK,ZERO
     2      ,W,ZERO, S,ZERO,           (C(I),ZERO,I=1,N)
     3      ,(D(I),ZERO, I=1,M) ,(E(I),ZERO,I=1,L) ,(C2(I),ZERO,I=1,N2)
      NUM = N + M + N2
      WRITE  (SAVTP)  ((BR(I,J),ZERO, BI(I,J),ZERO,I=1,NUM),J=1,NUM)
   75 CALL MATX (DIRECTP,PUNCH, SAVTP, TITLE, UNITEE)
      GO TO 1
    2 CONTINUE
      STOP
      END
```

```
      SUBROUTINE CAL200
C                                                          ZDM915 62 - 61
      DIMENSION C(40),D(40)      ,BR(60,60),BTR(60),BI(60,60),BTI(60)
     1          ,X(16), WT(16) ,C2(40)
      COMMON   /GAUS/
     1              BSQ, WDS, ZL, RL, ASQ ,DT1, DT2
     2                   ,ICN
      COMMON   /MATGUS/          B2, AINK, PI2, C, D, A, B, CHK ,C2
     1     ,INK, N, M, MW, LP, L, NN ,N2
      COMMON   /SAV1/  BR,BI
C  *   -  *  -  *  -   *  -  *  -  *  -  *  -  *  -  *  -  *  -  *
      FMW = FLOAT(MW)
      DO 200 JC=1,M
      IF(JC-1)210,210,211
  210 R=D(JC)* B2  + AINK
      GO TO 212
  211 JE=JC-1
      R=R+(D(JE)+D(JC))*B2
  212 WRITE(6,153) JC,R
  153 FORMAT(1H1,5X,'BLOCK NO',I3,5X,'RADIUS = ',F10.4,//)
      ICN=ICN+1
      IDN=0
C
C        CALCULATION OF THE D MATRIX  ELEMENTS
C
      DO 220 JJ=1,M
      IDN=IDN+1
      IF(JJ-JC)221,222,221
  222 BR(ICN,IDN)= PI2
      GO TO 223
  221 BR(ICN,IDN)=0.0
  223 BI(ICN,IDN)=0.0
      IF(MOD(IDN,45).EQ.0) WRITE(6,3718)
 3718 FORMAT(1H1)
      WRITE(6,154) IDN,BR(ICN,IDN),BI(ICN,IDN)
  154 FORMAT(1H ,5X,I3,5X,F10.4,2X,'+',2X,F10.4,2X,'I')
  220 CONTINUE
C
C        CALCULATION OF THE A1  MATRIX  ELEMENTS
C
      DO 230 K=1,N
      B2C = B2 * C(K)
      IF(K-1)231,231,232
  231 ZZ=-B2C
      GO TO 233
  232 KL=K-1
      ZZ=ZZ-(C(KL)+C(K))*B2
  233 IDN=IDN+1
      ZB =  ABS (ZZ)
      BR(ICN,IDN)=0.0
      BI(ICN,IDN)=0.0
```

```
      DO 270 I=1,L
        IF (I - 2)                                          234, 235, 237
  234 DT = DT1
      TT = 0.0
                                                            GO TO 236
  235 DT = DT2
      TT = (DT1 + DT) * .5
                                                            GO TO 236
  237 DT = DT2
      TT = TT + DT
  236 BDTD4 = B * DT / 4.0
      DTD2 = DT / 2.0
      BDTD4C = BDTD4 * C(K)
      DO 250 J=1,LP
      ILK=J
      ILL=NN+2*(J-1)
      BTR(J)=0.0
      BTI(J)=0.0
      CALL GAUSS(X,WT,ILL)
      SANR=0.0
      SANI=0.0
      DO 255 II=1,ILL
      ZI=ZZ-        X(II) * B2C
      ZISQ = ZI * ZI
      DABSZI =  ABS (ZI)
      DO 255 JJ=1,ILL
      TI=TT-   X(JJ) * DTD2
      RI = ((R-B *  COS(TI))**2 +  BSQ  * ( SIN(TI))**2 + ZISQ )**0.5
      ART=RI*WDS
      CART =  COS(ART)
      SART =  SIN(ART)
      SINT=ZI*COS(FMW*TI) / (RI*RI)
      DUMY = B * SINT * WT(II) * WT(JJ)
      SANR=    -DUMY*      (CART/RI+  SART*WDS)              +SANR
      SANI=DUMY*(WDS*CART  -SART/RI)                 +SANI
  255 CONTINUE
      BTR(J)=SANR*BDTD4C
      BTI(J)=SANI*BDTD4C
        IF (J .LT. 2)                    GO TO 250
      JL=J-1
      ABT =  ABS( ABS(BTR(J)) -  ABS(BTR(JL)))
        IF (ABT .GT. CHK)                          GO TO 257
      ABC =  ABS( ABS(BTI(J)) -  ABS(BTI(JL)))
        IF (ABC .LE. CHK)                          GO TO 260
  257 IF(J-LP)250,253,260
  253 WRITE (6,6500)     ABT, ABC, TT, ZZ   ,BTR(J), BTI(J)
 6500 FORMAT('       INTEGRATION DID NOT CONVERGE - REAL DIFFERENCE =',
     1 E13.5,/'       IMAGINARY DIFFERENCE =', E13.5,5X'THETA =',E13.5/
     2        /'       Z =',F13.5,5X'BTR =',E13.5,5X'BTI =',E13.5)
  250 CONTINUE
  260 KIL=ILK-1
```

```
      BR(ICN,IDN)=BR(ICN,IDN)+BTR(ILK)
      BI(ICN,IDN)=BI(ICN,IDN)+BTI(ILK)
  270 CONTINUE
      IF(MOD(IDN,45).EQ.0) WRITE(6,3718)
      WRITE(6,155) IDN,BR(ICN,IDN),BI(ICN,IDN),ZZ
  155 FORMAT(1H ,5X,I3,5X,F10.4,2X,'+',2X,F10.4,2X,'I',8X,'Z = ',F10.4)
  230 CONTINUE
C
C         CALCULATION OF THE A2  MATRIX  ELEMENTS
C
      IF(INK-1)200,500,500
  500 DO 530 K=1,N2
      B2C = B2 *C2(K)
      IF(K-1)531,531,532
  531 ZZ=B2C
      GO TO 533
  532 KL=K-1
      ZZ=ZZ+(C2(KL) + C2(K)) * B2
  533 IDN=IDN+1
      ZB =  ABS (ZZ)
      BR(ICN,IDN)=0.0
      BI(ICN,IDN)=0.0
      DO 570 I=1,L
        IF (I - 2)                                        534, 535, 537
  534 DT = DT1
      TT = 0.0
                                                          GO TO 536
  535 DT = DT2
      TT = (DT1 + DT) * .5
                                                          GO TO 536
  537 DT = DT2
      TT = TT + DT
  536 BDTD4 = B * DT / 4.0
      DTD2 = DT / 2.0
      BDTD4C = BDTD4 *C2(K)
      DO 550 J=1,LP
      ILK=J
      ILL=NN+2*(J-1)
      BTR(J)=0.0
      BTI(J)=0.0
      CALL GAUSS(X,WT,ILL)
      SANR=0.0
      SANI=0.0
      DO 555 II=1,ILL
      ZI=ZZ-       X(II) * B2C
      ZISQ = ZI * ZI
      DABSZI =  ABS (ZI)
      ZIA = ZI * A
      DO 555 JJ=1,ILL
      TI=TT-   X(JJ) *DTD2
      RI = ((R - A* COS(TI))**2 +  ASQ  * ( SIN(TI))**2 + ZISQ )**0.5
```

```
      ART=RI*WDS
      CART=  COS(ART)
      SART=  SIN(ART)
      SINT=ZIA * COS(FMW*TI) / (RI*RI)
      DUMY =      SINT * WT(II) * WT(JJ)
      SANR=   -DUMY*   (CART/RI+  SART*WDS)              +SANR
      SANI=  (WDS* CART  -SART/RI)  *DUMY        +SANI
  555 CONTINUE
      BTR(J)=SANR*BDTD4C
      BTI(J)=SANI*BDTD4C
        IF (J .LT. 2)                              GO TO 550
      JL=J-1
      ABT =  ABS( ABS(BTR(J)) -  ABS(BTR(JL)))
        IF (ABT .GT. CHK)                          GO TO 557
      ABC =  ABS( ABS(BTI(J)) -  ABS(BTI(JL)))
        IF (ABC .LE. CHK)                          G    ) 560
  557 IF(J-LP)550,553,560
  553 WRITE (6,6500)  ABT, ABC, TT, ZZ ,BTR(J), BTI(J)
  550 CONTINUE
  560 KIL=ILK-1
      BR(ICN,IDN)=BR(ICN,IDN)+BTR(ILK)
      BI(ICN,IDN)=BI(ICN,IDN)+BTI(ILK)
  570 CONTINUE
      IF(MOD(IDN,45).EQ.0) WRITE(6,3718)
      WRITE(6,155) IDN,BR(ICN,IDN),BI(ICN,IDN),ZZ
  530 CONTINUE
  200 CONTINUE
      RETURN
      END
```

```
      SUBROUTINE CAL300
C                                                          ZDM915 63 - 61
      DIMENSION C(40),D(40)      ,BR(60,60),BTR(60),BI(60,60),BTI(60)
     1         ,X(16), WT(16) ,C2(40)
      COMMON  /GAUS/
     1              BSQ, WDS, ZL, RL, ASQ ,DT1, DT2
     2                   ,ICN
      COMMON  /MATGUS/          B2, AINK, PI2, C, D, A, B, CHK ,C2
     1     ,INK, N, M, MW, LP, L, NN ,N2
      COMMON  /SAVI/  BR, BI
 6500 FORMAT('       INTEGRATION DID NOT CONVERGE - REAL DIFFERENCE =',
     1 E13.5,/'       IMAGINARY DIFFERENCE =', E13.5,5X'THETA =',E13.5/
     2       /'       Z =',E13.5,5X'BTR =',E13.5,5X'BTI =',E13.5)
  155 FORMAT(1H ,5X,I3,5X,F10.4,2X,'+',2X,F10.4,2X,'I',8X,'Z = ',F10.4)
C  *   -  *  -  *  -   *  -  *  -  *  -  *  -  *  -  *  -  *  -  *
C
C         CALCULATION OF THE B1  MATRIX  ELEMENTS
C
      FMW = FLOAT(MW)
      DO 300 JC=1,N
      IF(JC-1)310,310,311
  310 ZZ=-C(JC)*B2
      GO TO 312
  311 JF=JC-1
      ZZ=ZZ-(C(JC)+C(JF))*B2
  312 ICN=ICN+1
      ZZSQ = ZZ * ZZ
      WRITE(6,160) ICN,ZZ
  160 FORMAT(1H1,5X,'BLOCK NO',I3,5X,'Z DISTANCE = ',F10.4,//)
      IDN=0
      DO 330 K=1,M
      B2D = B2 * D(K)
      IF(K-1)321,321,322
  321 R= B2D       + AINK
      GO TO 323
  322 KL=K-1
      R=R+(D(KL)+D(K))*B2
  323 IDN=IDN+1
      BR(ICN,IDN)=0.0
      BI(ICN,IDN)=0.0
      DO 370 I=1,L
        IF (I - 2)                                    334, 335, 337
  334 DT = DT1
      TT = 0.0
                                                      GO TO 336
  335 DT = DT2
      TT = (DT1 + DT) * .5
                                                      GO TO 336
  337 DT = DT2
      TT = TT + DT
  336 BDTD4 = B * DT / 4.0
```

```
      DTD2 = DT / 2.0
      BDTD4D = BDTD4 * D(K)
      DO 350 J=1,LP
      ILK=J
      ILL=NN+2*(J-1)
      BTR(J)=0.0
      BTI(J)=0.0
      CALL GAUSS(X,WT,ILL)
      SANR=0.0
      SANI=0.0
      DO 355 II=1,ILL
      RI=R-        X(II) *B2D
      RISQ = RI * RI
      DO 355 JJ=1,ILL
      TI=TT-   X(JJ)*DTD2
      RO=((B-RI* COS(TI))**2 +  RISQ   * ( SIN(TI))**2 + ZZSQ )**0.5
      ART=RO*WDS
      CART =  COS(ART)
      SART =  SIN(ART)
      SINT=RI*(B-RI* COS(TI)) * COS(FMW*TI)/(RO*RO)
      DUMY =      SINT * WT(II) * WT(JJ)
      SANR=DUMY*(CART/RO+  SART*WDS)              +SANR
      SANI=DUMY*(SART/RO-  CART*WDS)              +SANI
  355 CONTINUE
      BTR(J)=SANR*BDTD4D
      BTI(J)=SANI*BDTD4D
        IF (J .LT. 2)                 GO TO 350
      JL=J-1
      ABT =  ABS( ABS(BTR(J)) -  ABS(BTR(JL)))
        IF (ABT .GT. CHK)                        GO TO 357
      ABC =  ABS( ABS(BTI(J)) -  ABS(BTI(JL)))
        IF (ABC .LE. CHK)                        GO TO 360
  357 IF(J-LP)350,353,360
  353 WRITE (6,6500)  ABT, ABC, TT, R  ,BTR(J), BTI(J)
  350 CONTINUE
  360 KIL=ILK-1
      BR(ICN,IDN)=BR(ICN,IDN)+BTR(ILK)
      BI(ICN,IDN)=BI(ICN,IDN)+BTI(ILK)
  370 CONTINUE
      IF(MOD(IDN,45).EQ.0) WRITE(6,6843)
 6843 FORMAT(1H1)
      WRITE(6,165) IDN,BR(ICN,IDN),BI(ICN,IDN),R
  165 FORMAT(1H ,5X,I3,5X,F10.4,2X,'+',2X,F10.4,2X,'I',8X,'R = ',F10.4)
  330 CONTINUE
C
C        CALCULATION OF THE C11 MATRIX  ELEMENTS
C
      DO 430 K=1,N
      B2C = B2 * C(K)
      IF(K-1)421,421,422
  421 Z=-B2C
```

```
      GO TO 433
  422 KL=K-1
      Z=Z-(C(KL)+C(K))*B2
  433 IDN=IDN+1
      ZB =  ABS (Z)
      BR(ICN,IDN)=0.0
      BI(ICN,IDN)=0.0
      DO 470 I=1,L
C**             ADDITION TO TEST CLOSED FORM SOLN.
        IF (I.GT.1)                                          GO TO 4446
      ILK = 2
      BTI(ILK) = 0.DO
      BTR(ILK) = 0.DO
        IF (K .NE. JC)                                       GO TO 460
      BTR(ILK) = DTI
        IF (MW .NE. 0)      BTR(ILK) = 2.0 *  SIN(FMW*DT1 /2.0) / FMW
                                                             GO TO 460
 4446 CONTINUE
C       --    -    TO HERE  -   -    -  -   - -   -   -    -    -    -
        IF (I - 2)                                       435, 435, 437
  435 DT = DT2
      TT = (DT1 + DT) * .5
                                                             GO TO 436
  437 DT = DT2
      TT = TT + DT
  436 BDTD4 = B * DT / 4.0
      DTD2 = DT / 2.0
      BDTD4C = BDTD4 * C(K)
      DO 450 J=1,LP
      ILL=NN+2*(J-1)
      ILK=J
      BTR(J)=0.0
      BTI(J)=0.0
      CALL GAUSS(X,WT,ILL)
      SANR=0.0
      SANI=0.0
      DO 455 II=1,ILL
      ZI=Z-       X(II) *B2C
      ZZZISQ = (ZZ-ZI)**2
      DABSZI =  ABS (ZI)
      DO 455 JJ=1,ILL
      TI=TT-   X(JJ)*DTD2
      RI=((B-B* COS(TI))**2 + (B* SIN(TI))**2 +   ZZZISQ  )**0.5
      ART=RI*WDS
      CART =  COS(ART)
      SART =  SIN(ART)
      SINT=B*(1.0- COS(TI)) * COS(FMW*TI) / (RI*RI)
      DUMY = B * SINT * WT(II) * WT(JJ)
      SANR=DUMY*(CART/RI+  SART*WDS)                +SANR
      SANI=DUMY*(SART/RI-  CART*WDS)                +SANI
  455 CONTINUE
```

```
      BTR(J)=SANR*BDTD4C
      BTI(J)=SANI*BDTD4C
        IF (J .LT. 2)                    GO TO 450
      JL=J-1
      ABT =  ABS( ABS(BTR(J))-  ABS(BTR(JL)))
        IF (ABT .GT. CHK)                          GO TO 457
      ABC =  ABS( ABS(BTI(J)) -  ABS(BTI(JL)))
        IF (ABC .LE. CHK)                          GO TO 460
  457 IF(J-LP)450,453,460
  453 WRITE (6,6500)  ABT, ABC, TT, Z  ,BTR(J), BTI(J)
  450 CONTINUE
  460 KIL=ILK-1
      BR(ICN,IDN)=BR(ICN,IDN)+BTR(ILK)
      BI(ICN,IDN)=BI(ICN,IDN)+BTI(ILK)
  470 CONTINUE
      IF(MOD(IDN,45).EQ.0) WRITE(6,6843)
      WRITE(6,166) IDN,BR(ICN,IDN),BI(ICN,IDN),Z
  166 FORMAT(1H ,5X,I3,5X,F10.4,2X,'+',2X,F10.4,2X,'I',8X,'Z = ',F10.4)
  430 CONTINUE
C
C         CALCULATION OF THE C12 MATRIX  ELEMENTS
C
      IF(INK-1)300,600,600
  600 DO 630 K=1,N2
      B2C = B2 *C2(K)
      IF(K-1)631,631,632
  631 Z= B2C
      GO TO 633
  632 KL=K-1
      Z=Z+(C2(KL) +C2(K)) * B2
  633 IDN=IDN+1
      ZR =  ABS (Z)
      BR(ICN,IDN)=0.0
      BI(ICN,IDN)=0.0
      DO 670 I=1,L
        IF (I - 2)                                 634, 635, 637
  634 DT = DT1
      TT = 0.0
                                                   GO TO 636
  635 DT = DT2
      TT = (DT1 + DT) * .5
                                                   GO TO 636
  637 DT = DT2
      TT = TT + DT
  636 BDTD4 = B * DT / 4.0
      DTD2 = DT / 2.0
      BDTD4C = BDTD4 *C2(K)
      DO 650 J=1,LP
      ILK=J
      ILL=NN+2*(J-1)
      BTR(J)=0.0
```

```
      BTI(J)=0.0
      CALL GAUSS(X,WT,ILL)
      SANR=0.0
      SANI=0.0
      DO 655 II=1,ILL
      ZI=Z-        X(II)*B2C
      ZZZISQ = (ZZ-ZI)**2
      DABSZI =  ABS (ZI)
      DO 655 JJ=1,ILL
      TI=TT-   X(JJ)*DTD2
      CIL =  COS(TI)
      SIL =  SIN(TI)
      RI=((B-A*CIL)**2+(A*SIL)**2+ ZZZISQ   )**0.5
      ART=RI*WDS
      CART =  COS(ART)
      SART =  SIN(ART)
      SINT=(B-A*CIL)*A* COS(FMW*TI) / (RI*RI)
      DUMY =      SINT * WT(II) * WT(JJ)
      SANR=DUMY*(CART/RI+  SART*WDS)                    +SANR
      SANI=DUMY*(SART/RI-  CART*WDS)                    +SANI
655   CONTINUE
      BTR(J)=SANR*BDTD4C
      BTI(J)=SANI*BDTD4C
        IF (J .LT. 2)                  GO TO 650
      JL = J-1
      ABT =  ABS( ABS(BTR(J)) -  ABS(BTR(JL)))
        IF (ABT .GT. CHK)                          GO TO 657
      ABC =  ABS( ABS(BTI(J)) -  ABS(BTI(JL)))
        IF (ABC .LE. CHK)                          GO TO 660
657   IF(J-LP)650,653,660
653   WRITE (6,6500)  ABT, ABC, TT, Z ,BTR(J), BTI(J)
650   CONTINUE
660   KIL=ILK-1
      BR(ICN,IDN)=BR(ICN,IDN)+BTR(ILK)
      BI(ICN,IDN)=BI(ICN,IDN)+BTI(ILK)
670   CONTINUE
      IF(MOD(IDN,45).EQ.0) WRITE(6,6843)
      WRITE(6,155) IDN,BR(ICN,IDN),BI(ICN,IDN),Z
630   CONTINUE
300   CONTINUE
      RETURN
      END
```

```
      SUBROUTINE CAL700
C                                                              ZDM915 64 - 61
      DIMENSION C(40),D(40)      ,BR(60,60),BTR(60),BI(60,60),BTI(60)
     1         ,X(16), WT(16) ,C2(40)
      COMMON   /GAUS/
     1              BSQ, WDS, ZL, RL, ASQ ,DT1, DT2
     2                   ,ICN
      COMMON   /MATGUS/          B2, AINK, PI2, C, D, A, B, CHK ,C2
     1     ,INK, N, M, MW, LP, L, NN ,N2
      COMMON    /SAV1/  BR,BI
 6500 FORMAT ('       INTEGRATION DID NOT CONVERGE - REAL DIFFERENCE =',
     1  E13.5, 5X, 'IMAGINARY DIFFERENCE =' ,E13.5/15X, 'THETA =',
     2  E13.5,    5X, 'Z =', E13.5 , 5X,'BTR =',F13.5,5X, 'BTI =',E13.5)
  155 FORMAT(1H ,5X,I3,5X,F10.4,2X,'+',2X,F10.4,2X,'I',8X,'Z = ',F10.4)
  160 FORMAT(1HO,5X,'BLOCK NO',I3,5X,'Z DISTANCE = ',F10.4,//)
  165 FORMAT(1H ,5X,I3,5X,F10.4,2X,'+',2X,F10.4,2X,'I',8X,'R = ',F10.4)
  166 FORMAT(1H ,5X,I3,5X,F10.4,2X,'+',2X,F10.4,2X,'I',8X,'Z = ',F10.4)
C   *   -   *   -   *   -   *   -   *   -   *   -   *   -   *   -   *   -   *
      FMW = FLOAT(MW)
      DO 700 JC=1,N2
      IF(JC-1)710,710,711
  710 ZZ=C2(JC) * B2
      GO TO 712
  711 JE=JC-1
      ZZ=ZZ+(C2(JC) + C2(JE)) * B2
  712 ICN=ICN+1
      ZZSQ = ZZ * ZZ
      WRITE(6,160) ICN,ZZ
      IDN=0
C
C        CALCULATION OF THE B2  MATRIX  ELEMENTS
C
      DO 730 K=1,M
      B2D = B2 * D(K)
      IF(K-1)721,721,722
  721 R = B2D      +  AINK
      GO TO 723
  722 KL=K-1
      R=R+(D(K)+D(KL))*B2
  723 IDN=IDN+1
      BR(ICN,IDN)=0.0
      BI(ICN,IDN)=0.0
      DO 770 I=1,L
        IF (I - 2)                                    734, 735, 737
  734 DT = DT1
      TT = 0.0
                                                      GO TO 736
  735 DT = DT2
      TT = (DT1 + DT) * .5
                                                      GO TO 736
  737 DT = DT2
```

```
      TT = TT + DT
  736 BDTD4 = B * DT / 4.0
      DTD2 = DT / 2.0
      BDTD4D = BDTD4 * D(K)
      DO 750 J=1,LP
      ILK=J
      ILL=NN+2*(J-1)
      BTR(J)=0.0
      BTI(J)=0.0
      CALL GAUSS(X,WT,ILL)
      SANR=0.0
      SANI=0.0
      DO 755 II=1,ILL
      RI=R-        X(II)*B2D
      RISQ = RI * RI
      DO 755 JJ=1,ILL
      TI=TT-    X(JJ)*DTD2
      RO=((A-RI* COS(TI))**2 +  RISQ   *( SIN(TI))**2 + ZZSQ )**0.5
      ART=RO*WDS
      CART =  COS(ART)
      SART =  SIN(ART)
      SINT=RI*(A-RI* COS(TI)) * COS(FMW*TI) / (RO*RO)
      DUMY =      SINT * WT(II) * WT(JJ)
      SANR=DUMY*(CART/RO+  SART*WDS)              +SANR
      SANI=DUMY*(SART/RO-  CART*WDS)              +SANI
  755 CONTINUE
      BTR(J)=SANR*BDTD4D
      BTI(J)=SANI*BDTD4D
        IF (J .LT. 2)                  GO TO 750
      JL=J-1
      ABT =  ABS( ABS(BTR(J)) -  ABS(BTR(JL)))
        IF (ABT .GT. CHK)                        GO TO 757
      ABC =  ABS( ABS(BTI(J)) -  ABS(BTI(JL)))
        IF (ABC .LE. CHK)                        GO TO 760
  757 IF(J-LP)750,753,760
  753 WRITE (6,6500)  ABT, ABC, TT, R  ,BTR(J), BTI(J)
  750 CONTINUE
  760 KIL=ILK-1
      BR(ICN,IDN)=BR(ICN,IDN)+BTR(ILK)
      BI(ICN,IDN)=BI(ICN,IDN)+BTI(ILK)
  770 CONTINUE
      WRITE(6,165) IDN,BR(ICN,IDN),BI(ICN,IDN),R
  730 CONTINUE
C
C        CALCULATION OF THE C21 MATRIX  ELEMENTS
C
      DO 830 K=1,N
      B2C = B2 * C(K)
      IF(K-1)821,821,822
  821 Z=-B2C
      GO TO 833
```

```
822 KL=K-1
    Z=Z-(C(K)+C(KL))*B2
833 IDN=IDN+1
    ZB =  ABS (Z)
    ZZSQ = ZZ * ZZ
    BR(ICN,IDN)=0.0
    BI(ICN,IDN)=0.0
    DO 870 I=1,L
      IF (I - 2)                                          834, 835, 837
834 DT = DT1
    TT = 0.0
                                                          GO TO 836
835 DT = DT2
    TT = (DT1 + DT) * .5
                                                          GO TO 836
837 DT = DT2
    TT = TT + DT
836 BDTD4 = B * DT / 4.0
    DTD2 = DT / 2.0
    BDTD4C = BDTD4 * C(K)
    DO 850 J=1,LP
    ILL=NN+2*(J-1)
    ILK=J
    BTR(J)=0.0
    BTI(J)=0.0
    CALL GAUSS(X,WT,ILL)
    SANR=0.0
    SANI=0.0
    DO 855 II=1,ILL
    ZI=Z-        X(II)*B2C
    ZZZISQ = (ZZ-ZI)**2
    DABSZI =  ABS (ZI)
    DO 855 JJ=1,ILL
    TI=TT-   X(JJ)*DTD2
    RI=((A-B* COS(TI))**2 + BSQ * ( SIN(TI))**2 +   ZZZISQ  )**0.5
    ART=RI*WDS
    CART =  COS(ART)
    SART =  SIN(ART)
    SINT=B*(A-B* COS(TI)) * COS(FMW*TI) / (RI*RI)
    DUMY =      SINT * WT(II) * WT(JJ)
    SANR=DUMY*(CART/RI+  SART*WDS)              +SANR
    SANI=DUMY*(SART/RI-  CART*WDS)              +SANI
855 CONTINUE
    BTR(J)=SANR*BDTD4C
    BTI(J)=SANI*BDTD4C
      IF (J .LT. 2)                  GO TO 850
    JL=J-1
    ABT =  ABS( ABS(BTR(J)) -  ABS(BTR(JL)))
      IF (ABT .GT. CHK)                        GO TO 857
    ABC =  ABS( ABS(BTI(J)) -  ABS(BTI(JL)))
      IF (ABC .LE. CHK)                        GO TO 860
```

```
  857 IF(J-LP)850,853,860
  853 WRITE (6,6500)   ABT, ABC, TT, Z  ,BTR(J), BTI(J)
  850 CONTINUE
  860 KIL=ILK-1
      BR(ICN,IDN)=BR(ICN,IDN)+BTR(ILK)
      BI(ICN,IDN)=BI(ICN,IDN)+BTI(ILK)
  870 CONTINUE
      WRITE(6,166) IDN,BR(ICN,IDN),BI(ICN,IDN),Z
  830 CONTINUE
C
C        CALCULATION OF THE C22 MATRIX  ELEMENTS
C
      DO 930 K=1,N2
      B2C = B2 *C2(K)
      IF(K-1)921,921,922
  921 Z=B2C
      GO TO 933
  922 KL=K-1
      Z=Z+(C2(K) + C2(KL)) * B2
  933 IDN=IDN+1
      ZB =  ABS (Z)
      BR(ICN,IDN)=0.0
      BI(ICN,IDN)=0.0
      DO 970 I=1,L
C**             ADDITION TO TEST CLOSED FORM SOLN.
        IF (I.GT.1)                                        GO TO 4446
      ILK = 2
      BTI(ILK) = 0.DO
      BTR(ILK) = 0.DO
        IF (K .NE. JC)                                     GO TO 960
      BTR(ILK) =-DT1
        IF (MW .NE. 0)   BTR(ILK) =-2.0 * SIN(FMW*DT1/2.0) / FMW
                                                           GO TO 960
 4446 CONTINUE
C      --    -     TO HERE  -   -    -  -   - -   -   -    -     -
        IF (I - 2)                                    935, 935, 937
  935 DT = DT2
      TT = (DT1 + DT) * .5
                                                           GO TO 936
  937 DT = DT2
      TT = TT + DT
  936 BDTD4 = B * DT / 4.0
      DTD2 = DT / 2.0
      BDTD4C = BDTD4 *C2(K)
      DO 950 J=1,LP
      ILK=J
      ILL=NN+2*(J-1)
      BTR(J)=0.0
      BTI(J)=0.0
      CALL GAUSS(X,WT,ILL)
      SANR=0.0
```

C-2

```
      SANI=0.0
      DO 955 II=1,ILL
      ZI=Z-        X(II)*B2C
      ZZZISQ = (ZZ-ZI)**2
      DABSZI =  ABS (ZI)
      DO 955 JJ=1,ILL
      TI=TT-    X(JJ)*DTD2
      RI=((A-A* COS(TI))**2 +  (A *    SIN(TI))**2 +  ZZZISQ    )**0.5
      SINT=A*(1.0- COS(TI)) * COS(FMW*TI) / (RI*RI)
      ART = RI * WDS
      CART = COS(ART)
      SART = SIN(ART)
      DUMY = A * SINT * WT(II) * WT(JJ)
      SANR=DUMY*  (CART/RI+  SART*WDS)              +SANR
      SANI=DUMY*  (SART/RI-  CART*WDS)              +SANI
  955 CONTINUE
      BTR(J)=SANR*BDTD4C
      BTI(J)=SANI*BDTD4C
        IF (J .LT. 2)                  GO TO 950
      JL=J-1
      ABT =  ABS( ABS(BTR(J)) -  ABS(BTR(JL)))
        IF (ABT .GT. CHK)                        GO TO 957
      ABC =  ABS( ABS(BTI(J)) -  ABS(BTI(JL)))
        IF (ABC .LE. CHK)                        GO TO 960
  957 IF(J-LP)950,953,960
  953 WRITE (6,6500)  ABT, ABC, TT, Z ,BTR(J), BTI(J)
  950 CONTINUE
  960 KIL=ILK-1
      BR(ICN,IDN)=BR(ICN,IDN)+BTR(ILK)
      BI(ICN,IDN)=BI(ICN,IDN)+BTI(ILK)
  970 CONTINUE
      WRITE(6,155) IDN,BR(ICN,IDN),BI(ICN,IDN),Z
  930 CONTINUE
  700 CONTINUE
      RETURN
      END
```

APPENDIX 4

GAUSS SUBROUTINE LISTING

PRECEDING PAGE BLANK NOT FILMED

```
      SUBROUTINE GAUSS(X,WT,M)
C       STORE DP TEST IN 81                                  ZDM915 11 - BT
CD    IMPLICIT REAL*8  (A-H,O-Z)
      DIMENSION X(12),WT(12)
      IF(M-4)10,11,12
   10 X(1)=-0.577350269189626
      X(2)= -X(1)
      WT(1)=1.0
      WT(2)=1.0
      GO TO 20
   11 X(1)=-0.861136311594053
      X(2)=-0.339981043584856
      X(3)=-     X(2)
      X(4)=-     X(1)
      WT(1)=0.347854845137454
      WT(2)=0.652145154862546
      WT(3)=WT(2)
      WT(4)=WT(1)
      GO TO 20
   12 IF(M-8)13,14,15
   13 X(1)=-0.932469514203152
      X(2)=-0.661209386466265
      X(3)=-0.238619186083197
      X(4)=-     X(3)
      X(5)=-     X(2)
      X(6)=-     X(1)
      WT(1)=0.171324492379170
      WT(2)=0.360761573048139
      WT(3)=0.467913934572691
      WT(4)=WT(3)
      WT(5)=WT(2)
      WT(6)=WT(1)
      GO TO 20
   14 X(1)=-0.960289856497536
      X(2)=-0.796666477413627
      X(3)=-0.525532409916329
      X(4)=-0.183434642495650
      X(5)=-     X(4)
      X(6)=-     X(3)
      X(7)=-     X(2)
      X(8)=-     X(1)
      WT(1)=0.101228536290376
      WT(2)=0.222381034453374
      WT(3)=0.313706645877887
      WT(4)=0.362683783378362
      WT(5)=WT(4)
      WT(6)=WT(3)
      WT(7)=WT(2)
      WT(8)=WT(1)
      GO TO 20
   15 IF(M-12)16,17,18
   16 X(1)=-0.973906528517172
      X(2)=-0.865063366688985
```

```
      X(3)=-0.679409568299024
      X(4)=-0.433395394129247
      X(5)=-0.148874338981631
      X(6)=-     X(5)
      X(7)=-     X(4)
      X(8)=-     X(3)
      X(9)=-     X(2)
      X(10)=-     X(1)
      WT(1)=0.066671344308688
      WT(2)=0.149451349150581
      WT(3)=0.219086362515982
      WT(4)=0.269266719309996
      WT(5)=0.295524224714753
      WT(6)=WT(5)
      WT(7)=WT(4)
      WT(8)=WT(3)
      WT(9)=WT(2)
      WT(10)=WT(1)
      GO TO 20
   17 X(1)=-0.981560634246719
      X(2)=-0.904117256370475
      X(3)=-0.769902674194305
      X(4)=-0.587317954286617
      X(5)=-0.367831498918180
      X(6)=-0.125333408511469
      X(7)=-     X(6)
      X(8)=-     X(5)
      X(9)=-     X(4)
      X(10)=-     X(3)
      X(11)=-     X(2)
      X(12)=-     X(1)
      WT(1)=0.047175336386512
      WT(2)=0.106939325995318
      WT(3)=0.160078328543346
      WT(4)=0.203167426723066
      WT(5)=0.233492536538355
      WT(6)=0.249147045813403
      WT(7)=WT(6)
      WT(8)=WT(5)
      WT(9)=WT(4)
      WT(10)=WT(3)
      WT(11)=WT(2)
      WT(12)=WT(1)

                                                    GO TO 20
   18   IF (M-16)                          19, 21, 20
   19 X(1)=-0.986283808696812
      X(2)=-0.928434883663574
      X(3)=-0.827201315069765
      X(4)=-0.687292904811685
      X(5)=-0.515248636358154
      X(6)=-0.319112368927890
      X(7)=-0.108054948707344
      X(8)=-     X(7)
```

```
      X(9)=-     X(6)
      X(10)=    -X(5)
      X(11)=-     X(4)
      X(12)=-     X(3)
      X(13)=-     X(2)
      X(14)=-     X(1)
      WT(1)=0.035119460331752
      WT(2)=0.080158087159760
      WT(3)=0.121518570687903
      WT(4)=0.157203167158194
      WT(5)=0.185538397477938
      WT(6)=0.205198463721296
      WT(7)=0.215263853463158
      WT(8)=WT(7)
      WT(9)=WT(6)
      WT(10)=WT(5)
      WT(11)=WT(4)
      WT(12)=WT(3)
      WT(13)=WT(2)
      WT(14)=WT(1)

                                                    GO TO 20
   21 X(1)=-0.9894009349916 50
      X(2)=-0.944575023073233
      X(3)=-0.865631202387832
      X(4)=-0.755404408355003
      X(5)=-0.617876244402644
      X(6)=-0.458016777657227
      X(7)=-0.281603550779259
      X(8)=-0.095012509837637
      X(9)=-     X(8)
      X(10)=    -X(7)
      X(11)=-     X(6)
      X(12)=-     X(5)
      X(13)=-     X(4)
      X(14)=-     X(3)
      X(15)=-     X(2)
      X(16)=-     X(1)
      WT(1)=0.027152459411754
      WT(2)=0.062253523938648
      WT(3)=0.095158511682493
      WT(4)=0.124628971255534
      WT(5)=0.149595988816577
      WT(6)=0.169156519395003
      WT(7)=0.182603415044924
      WT(8)=0.189450610455069
      WT(9)=WT(8)
      WT(10)=WT(7)
      WT(11)=WT(6)
      WT(12)=WT(5)
      WT(13)=WT(4)
      WT(14)=WT(3)
      WT(15)=WT(2)
      WT(16)=WT(1)
   20 RETURN
      END
```

APPENDIX 5

MATX SUBROUTINE LISTING

```
      SUBROUTINE  MATX (DRECTP, PUNCH, SAVTP, TITLE,DUMEE)
C         MATRIX CALC FROM
C         BOX METHOD INTEGRATION FOR SOURCE DISTRIBUTION OVER DUCT
C                  DOUBLE PERC. TEST                    ZDM915 66 - 66
      IMPLICIT REAL*8  (A-H,O-Z)
      LOGICAL * 1  PUNCH
      INTEGER * 2  DATE(3)
      INTEGER *4  DRECTP ,SAVTP ,TITLE(18) ,TPS/07/
     1    ,MXM/30/, MXN/40/, MXN2/30/, MXNN2/45/  ,MXNUM/60/
     2   ,RAD(3)/'*** RADIAL  */,  IDUCT(3)/'INNER DUCT  '/
     3 ,ODUCT(3)/'OUTER DUCT  '/
      REAL *4    AS, BS, WS, CHKS, DS(1), CS(1), ES(1), PHI1S(1)
     1     ,PHI2S(1), VRS(1) ,SS ,C2S(1)
      COMPLEX *16      V(40)
     1       ,PHI1,PHI2,AA,BB,CC,DD,DCMPLX ,DZERO/(0.D0,0.D0)/ ,DCONJG
      DIMENSION C(40),D(40) ,C2(40)
     2          ,PHI1(50),PHI2(40) ,VS(1)
     3          ,AA(40,45),BB(45,40),CC(60,60),DD(60,60)
      COMMON  /MATRIX/
     1                              V, PHI1, PHI2 ,W, S, E(40)
     2                    , IV ,KDF
      COMMON /MATGUS/           B2, AINK, PI2 ,C ,D ,A ,B ,CHK ,C2
     1      ,INK, N, M, MW, LP, L, NN ,N2
      COMMON /SAVE2/       BB
      COMMON /SAVE3/    AA
C   -   -    CC AND DD MUST BE IN THIS ORDER TO WORK WITH INVT  ******
      COMMON /SAV1/  CC,DD
      EQUIVALENCE   (V(1),VS(1),VRS(1))
     1    ,(A,AS) ,(B,BS),(W,WS) ,(S,SS), (CHK,CHKS) ,(D(1),DS(1))
     2    ,(C(1),CS(1)) ,(E(1),ES(1)), (PHI1(1),PHI1S(1))
     3    ,(PHI2(1),PHI2S(1)) ,(C2(1),C2S(1))
  100 FORMAT(36I2)
  102 FORMAT(7F10.3)
  103 FORMAT(18A4)
  104 FORMAT(7I10)
  105 FORMAT(6E12.5)
  106 FORMAT ('1', 10X, 18A4//)
  107 FORMAT ('1', 20X, 'CALCULATE PHI''S FROM BOX INTEGRATION MATRIX'/
     1      7X, A2, 2('/',A2), 5X, 18A4///)
  108 FORMAT ('0   C BUFFER (-Z)'/ (8X,1P4D15.4))
  110 FORMAT ('0  C2 BUFFER (+Z)'/ (8X,1P4D15.4))
  109 FORMAT ('0   D BUFFER (R) '/ (8X,1P4D15.4))
  200 FORMAT (6E12.5)
 9007 FORMAT (1P6D12.5)
 9008 FORMAT (A2, 2('/',A2), 18A4)
C  *   - * - * -  * - * - * - * - * - * - * - * - *
      CALL DATE1S (DATE)
      WRITE (6,107)  DATE, TITLE
      REWIND   SAVTP
      READ  (SAVTP)  INK, N, M, MW, LP, L, NN, KDF ,N2
     1     ,B2, AINK, PI2, A, B, CHK, W, S
```

```
     2    ,(C(I),I=1,N)  , (D(I),I=1,M) ,(E(I),I=1,L) ,(C2(I),I=1,N2)
      WRITE(6,5189) INK, N, M, MW, LP, L, NN, KDF, N2, B2, AINK,
     1 PI2, A, B, CHK, W, S
5189 FORMAT('  INK=',I3,'  N=',I3,'  M=',I3,'  MW=',I3,'  LP=',I3,
     1 '  L=',I3,'  NN=',I3,'  KDF=',I3,'  N2=',I3/'  B2=',F6.3,
     2 '  AINK=',F6.3,'  PI2=',F9.5,'  A=',F6.3,'  B=',F6.3,'  CHK=',
     3 F8.6/'  W=', F10.4,'  S=', F10.4)
      WRITE (6,108)  (C(I),I=1,N)
        IF (INK .GT. 0)       WRITE (6,110)  (C2(I),I=1,N2)
      WRITE (6,109)  (D(I),I=1,M)
        IF (.NOT. PUNCH)                                  GO TO 1003
                              WRITE (TPS,9008)    DATE, TITLE
                              WRITE (TPS,9007)    (C(I),I=1,N)
        IF (INK .GT. 0)       WRITE (TPS,9007)    (C2(I),I=1,N2)
                              WRITE (TPS,9007)    (D(I),I=1,M)
1003  NO = N
      NN2 = NO + N2
      NUM = M + N + N2
        IF (M.GT.MXM .OR.  N.GT.MXN  .OR.  N2.GT.MXN2  .OR.
     1       NN2.GT.MXNN2   .OR.  NUM.GT.MXNUM)        GO TO 9080
      NO2 = 2 * NO
      NO4 = 4 * NO
      N22 = 2 * N2
      N24 = 4 * N2
      MR2 = 2 * M
      MR4 = 4 * M
      LR2 = 2 * L
      IF(INK-1)87,77,77
   77 N = N + N2
   87 CONTINUE
      READ  (SAVTP)  ((DD(I,J),          I=1,NUM), J=1,NUM)
      DO 10 I=1,M
      DO 10 J=1,N
      K=J+M
      AA(I,J) = DD(I,K)
   10 CONTINUE
      DO 12 I=1,N
      DO 12 J=1,M
      K=I+M
      BB(I,J) = DD(K,J)
   12 CONTINUE
      DO 15 I=1,N
      DO 15 J=1,N
      K=I+M
      L=J+M
      CC(I,J) = DD(K,L) * PI2
   15 CONTINUE
      DO 50 I=1,N
      DO 50 J=1,N
      DD(I,J) = DZERO
      DO 55 K=1,M
```

```
   55 DD(I,J)=BB(I,K)*AA(K,J)+DD(I,J)
   50 CONTINUE
      CN = 0.0
      DO 56 I=1,N
      DO 56 J=1,N
      DD(I,J)=CC(I,J)-DD(I,J)
      CN = CN + DD(I,J) * DCONJG(DD(I,J))
   56 CONTINUE
C    --     --      DD IS IN COMMON AND IS DESTROYED BY INVT    ********
      CALL INVT(DD,CC,N,KKK)
         IF (KKK .EQ. 1)                                  GO TO 9000
      CM = 0.0
      DO 60 I=1,N
      DO 60 J=1,M
      CM = CM + CC(I,J) * DCONJG(CC(I,J))
      DD(I,J) = DZERO
      DO 66 K=1,N
      DD(I,J)=CC(I,K)*BB(K,J)+DD(I,J)
   66 CONTINUE
   60 CONTINUE
      COND = DSQRT (CN * CM) / DFLOAT(N)
      WRITE (6,7001)  COND
 7001 FORMAT ('0',20X, 'CONDITION NO. =', 1PE17.8)
C    -      -     -     OUTPUT ALL INFO TO THE DIRECTIVITY FACTOR AND    -
C     -      -      -   IMPEDANCE PROGRAMS IN SINGLE PERCISION  -     -
        IF (PUNCH)  WRITE (7,100)   K, M, N, N2, INK, LP, MW, NN, L
        IF (PUNCH)  WRITE (7,200)   A, B, W, S, CHK
        IF (PUNCH)  WRITE (7,200)   (DS(I),I=1,MR2,2)
        IF (PUNCH)  WRITE (7,200)   (CS(I),I=1,NO2,2)
      IF (PUNCH .AND. INK.GT.0)  WRITE (7,200)  (C2S(I),I=1,N22,2)
        IF (PUNCH)  WRITE (7,200)   (ES(I),I=1,NO2,L)
C**                   READ IN VELOCITIES
      READ(5,2000,END=9000)  IV
 2000 FORMAT(2I2)
C    -      -    IV .GT. 0    OLD CARD INPUT
C    -      -    IV .EQ. 0    CALL VELINT
C    -      -    IV .LT. 0    READ CHAMBER'S OUTPUT
      IVF = IV
      NAP = 1
      NAM = 1
        IF (IV)                          1005, 1008, 1010
 1005 READ (5,103)  TITLE
      WRITE (6,106)  TITLE
      READ (5,104)  NAP, NAM, NRM, NSR
      WRITE(6,104)  NAP, NAM, NRM, NSR
      IV = NRM
                                                    GO TO 1010
 1008 CALL VELINT (IV, M, D, INK, A, B, AINK, MW)
 1010 M2 = M * 2
      DO 2001 INAP =1,NAP
      DO 2001 INAM =1,NAM
```

```
      IF(I-1)82,82,83
   82 Z=- C(I) * B2
      GO TO 181
   83 KI=I-1
      Z = Z - (C (KI) + C (I)) * B2
  181 CONTINUE
      KOK=I+M
      IF(MOD(KOK,51).EQ.0) WRITE(6,106)
   81 WRITE(6,76) PHI1(I),Z
        IF (PUNCH)  WRITE (7,200)  (PHI1S(I),I=1,NO4,2)
      IF(INK-1)97,98,98
   98 DO 99 I=1,N2
      IF(I-1)72,72,73
   72 Z = C2(I) * B2
      GO TO 74
   73 KI=I-1
      Z = Z + (C2(KI) + C2(I)) * B2
   74 J=I+NO
   99 CONTINUE
   76 FORMAT(1H ,     2F10.4,' I',5X,'Z = ',F10.4)
      WRITE(6,76) PHI1(J),Z
      N1 = NO  + 1
      NR12 = NO4 + 1
      NR22 = NO4 + N24
        IF (PUNCH)  WRITE (7,200)  (PHI1S(I),I=NR12,NR22,2)
   97 CONTINUE
 2001 CONTINUE
 9000 RETURN
 9090 WRITE (6,9091)     M, NSR
 9091 FORMAT ('0     THE NO. OF RADII DO NOT MATCH.  CHECK INPUT CARDS'
     1  ,' AND DISK.     M =', I3,5X,'NSR =', I3)
                                                        GO TO 9000
 9080 WRITE (6,9081)     MXM, MXN, MXN2, MXNN2 ,MXNUM
 9081 FORMAT ('0     M IS GT', I3, ',  N IS GT',I3, ',  N2 IS GT',I3
     1      ,'  N+N2 IS GT', I3, ',OR M+N+N2 IS GT',I3 /
     2                              12X, 'THE DATA OR DIMENSIONING MUST'
     3    ,' BE CHANGED' ,10X, 30('*-'))
                                                        GO TO 9000
      END
```

```
      DO 2001 IRA=1,IV
        IF (IVF)                                        1015, 1018,   1030
 1015   IF (INK .EQ. 0)                                      GO TO 1016
        IF (NSR .NE. M)                                     GO TO 9090
      NB = 1
                                                            GO TO 1017
 1016 CONTINUE
C   -   -   -    FAN DUCT        --------    -    -    -    -
        IF (NSR .GT. M)                                     GO TO 9090
      NB = M - NSR
        IF (NB .EQ. 0)                                      GO TO 1117
          DO 1116  I =1,NB
 1116 V(I) = DZERO
 1117 NB = NB + 1
 1017 READ (5,105)  (V(I),I=NB,M)
                                                            GO TO 1040
 1018 CALL VELCAL (IRA, VS)
          DO 1020 I=1,M
      K = M - I + 1
      J = M2 - I * 2 + 1
      VS(J) = VS(K)
 1020 VS(J+1) = 0.D0
                                                                GO TO 1040
 1030     DO  550 I=1,M
  550 V(I) = 0.D0
      READ(5,102 ,END=9000)   (VS(I),I=1,M2,2)
 1040 DO 65 I=1,N
      PHI1(I) = DZERO
      DO 70 K=1,M
   70 PHI1(I)=DD(I,K)*V(K)*(-1.0)+PHI1(I)
   65 CONTINUE
      DO 75 I=1,M
      PHI2(I) = DZERO
      DO 80 K=1,N
   80 PHI2(I)=-    AA(I,K)*PHI1(K)/   PI2       +PHI2(I)
      PHI2(I)=V(I)/     PI2     +PHI2(I)
   75 CONTINUE
      WRITE(6,95)   IRA
   95 FORMAT(1H1    ,'SOURCE STRENGTH DISTRIBUTION',I15, /)
      DO 90 I=1,M
      IF(I-1)91,91,92
   91 R=D(I)* B2  +  AINK
      GO TO 90
   92 KI=I-1
      R=R+(D(I)+D(KI))* B2
   90 WRITE(6,96) PHI2(I),R ,V(I)
   96 FORMAT(1H ,    2F10.4,' I',5X,'R = ',F10.4, 7X,'V = ',2F8.2)
        IF (PUNCH)  WRITE (7,200)  (PHI2S(I),I=1,MR4,2)
 9009 FORMAT (3A4, 'PHI''S FOR ANG. PT',I3, ',  ANG. MD', I3
     1    , ',  AND RAD. MD', I3, / (1P6E12.5))
      DO 81 I=1,NO
```

APPENDIX 6

INVT SUBROUTINE LISTING

```
      SUBROUTINE INVT(A,AINV,N,KKK)
C                                                          ZDM915 65 - 65
      IMPLICIT REAL*8  (A-H,O-Z)
      COMPLEX *16 A,AINV,S,B,T,BAD
CDD   COMPLEX *08 A,AINV,S,B,T,BAD
      DIMENSION A(60,60),AINV(60,60)      ,B(60,120),BD(2) ,S(120)
      COMMON /SAV1/   B
      EQUIVALENCE (BD(1),BAD)
 1000 FORMAT (6D15.4)
C    **  **  ***   ***   ***   ***   ***   ***   ***   ****  **  ** *
      MM=2*N
      KKK = 0
      DO 23 I=1,N
      DO 23 J=1,N
   23 B(I,J) = A(I,J)
      K = N+1
      DO 24 I=1,N
      DO 24 J=K,MM
   24 B(I,J) = (0.0,0.0)
      DO 25 I=1,N
      K = I + N
   25 B(I,K) = (1.0,0.0)
      DO 33 I=1,N
      J = I
      BAD=B(I,J)
      BR = BD(1)
      BI = BD(2)
      BAR=(BR*BR+BI*BI)**0.5
      IF(BAR.GT.2.0D-06) GO TO 26
      L = I + 1
C     DO 12 K=I,N
      K = L
      BAD=B(L,J)
      BR = BD(1)
      BI = BD(2)
      BAR=(BR*BR+BI*BI)**0.5
      IF(BAR.GT.2.0D-06) GO TO 27
C  12 CONTINUE
      KKK = 1
      WRITE (6,1010)
 1010 FORMAT ('0   A SINGULAR MATRIX WAS INPUT TO SUBROUTINE INVT.')
      RETURN
   27 DO 13 M=1,MM
   13 S(M) = B(K,M)
      DO 14 M=1,MM
   14 B(K,M) = B(I,M)
      DO 16 M=1,MM
   16 B(I,M) = S(M)
   26 T = B(I,J)
      DO 17 K=1,MM
   17 B(I,K) = B(I,K)/T
```

```
      L = I + 1
      IF (L.GT.N) GO TO 33
      DO 10 K=L,N
      T = B(K,J)
      DO 10 NN=1,MM
   10 B(K,NN) = B(K,NN)-T*B(I,NN)
   33 CONTINUE
      IF (N.EQ.1) GO TO 50
      DO 20 I=2,N
      J = I
      L = I - 1
   29 T = B(L,J)
      DO 21 K=J,MM
   21 B(L,K) = B(L,K)-T*B(I,K)
      IF (L.EQ.1) GO TO 20
      L = L- 1
      GO TO 29
   20 CONTINUE
   50 DO 30 I=1,N
      DO 30 J=1,N
      NN = J + N
   30 AINV(I,J) = B(I,NN)
      RETURN
      END
```

APPENDIX 7

VELINT SUBROUTINE

PRECEDING PAGE BLANK NOT FILMED

```
      SUBROUTINE VELINT (NNZ,NARG, RARG, INK, AA, BB, AINK, MW)
C                                                              ZDM915 25 - 25
C**     -    -      MODAL VELOCITY CALCULATION
      IMPLICIT REAL*8(B)
      DOUBLE PRECISION  BJM1,BJM,B
     1                 ,DABS,DFLOAT
     2                 ,BJ1,BJ2,BJ,Z,ROOT(20),C(20),BP,X(40)
     3                 ,SIG,DN,BY1,BY2,BJS1,BJS2,BYS1,BYS2,F,FP,ZS,XS
     4                 ,RARG,R,XKMN,QMN,AA ,AINK
      DIMENSION RARG(1) ,R(30),BESM(1)
    1 FORMAT(6E12.6)
C     -     *     -     *     -     *     -     *     -     *     -     *
      READ(5,3) NNZ
      IF(MW.LT.0) GO TO 11
    3 FORMAT(36I2)
       SIG=AA/BB
      DN=DFLOAT(MW)
      C(1)=DN
      IF(MW.EQ.0) C(1)=3.D0
      DO 30 J=1,NNZ
      MP=MW+1
      NW=J-1
      N=1
      X(1)=C(J)
   10 CONTINUE
      CZ=1.D0
    4 FORMAT(1H ,3(10X,D25.16) )
      WRITE(6,4) C(J)
      IF(MW.EQ.0) GO TO 15
      CALL DBESJY(X(N),MW,BJM,BYM,BJM1,BYM1,IERR)
      XS=X(N)*SIG
      CALL DBESJY(XS,MW,BJSM,BYSM,BJSM1,BYSM1,IERR)
      BJPM=-BJM1+DN*BJM/X(N)
      BJPSM=-SIG*BJSM1+DN*BJSM/X(N)
      BYPM=-BYM1+DN*BYM/X(N)
      BYPSM=-SIG*BYSM1+DN*BYSM/X(N)
      BJPPM=BJM1/X(N)-(DN/(X(N)*X(N))-(DN/X(N))**2+1.D0)*BJM
      BYPPM=BYM1/X(N)-(DN/(X(N)*X(N))-(DN/X(N))**2+1.D0)*BYM
      BJPPSM=BJSM1*SIG/X(N)-(DN/(X(N)*X(N))-(DN/X(N))**2+SIG**2)*BJSM
      BYPPSM=BYSM1*SIG/X(N)-(DN/(X(N)*X(N))-(DN/X(N))**2+SIG**2)*BYSM
      F=BJPM*BYPSM-BJPSM*BYPM
      FP=BJPPM*BYPSM+BJPM*BYPPSM-BJPPSM*BYPM-BJPSM*BYPPM
      WRITE(6,4) F,FP
      X(N+1)=X(N)-F/FP
      WRITE(6,4) X(N+1)
      CALL DBESJY(X(N+1),MW,BJM,BYM,BJM1,BYM1,IERR)
      XS=X(N+1)*SIG
      CALL DBESJY(XS,MW,BJSM,BYSM,BJSM1,BYSM1,IERR)
      BJ=BJPM*BYPSM-BJPSM*BYPM
      IF (N.GT.25) GO TO 20
      IF(DABS(BJ).LT.1.D-15) GO TO 20
```

```
      GO TO 16
   15 IF(NW.EQ.0) GO TO 100
      CALL DBESJY(X(N),1,BJ1,BY1,BJ2,BY2,IERR)
      WRITE(6,4) BJ1,BY1
      WRITE(6,4) BJ2,BY2
      XS=SIG*X(N)
      CALL DBESJY(XS,1,BJS1,BYS1,BJS2,BYS2,IERR)
      WRITE(6,4)  BJS1,BYS1
      WRITE(6,4) BJS2,BYS2
      F=SIG*(BJ1*BYS1-BJS1*BY1)
      FP=SIG*BJ1*(-SIG*BYS2+BYS1/X(N))+SIG*BYS1*(-BJ2+BJ1/X(N))-SIG*
     ABJS1*(-BY2+BY1/X(N))-SIG*BY1*(-SIG*BJS2+BJS1/X(N))
      X(N+1)=X(N)-F/FP
      WRITE(6,4) X(N+1) ,F,FP
      CALL DBESJY(X(N+1),1,BJ1,BY1,BJ2,BY2,IERR)
      XS=SIG*X(N+1)
      CALL DBESJY(XS,1,BJS1,BYS1,BJS2,BYS2,IERR)
      BJ=SIG*(BJ1*BYS1-BJS1*BY1)
      WRITE(6,4) BJ
      IF(DABS(BJ).LT.1.D-15)  GO TO 20
   16 CONTINUE
      N=N+1
      GO TO 10
  100 X(2)=0.D0
   20 ROOT(J)=X(N+1)
      IF((MW.EQ.0).AND.(NW.EQ.0)) GO TO 17
      IF(J.EQ.NNZ) GO TO 30
      INDN=0
      INDP=0
      I=0
   60 I=I+1
      Z=ROOT(J)+.2D0*DFLOAT(I)
      WRITE(6,4) Z
      IF(MW.EQ.0) GO TO 80
      CALL DBESJY(Z,MW,BJM,BYM,BJM1,BYM1,IERR)
      ZS=SIG*Z
      CALL DBESJY(ZS,MW,BJSM,BYSM,BJSM1,BYSM1,IERR)
      BJPM=-BJM1+DN*BJM/Z
      BJPSM=-SIG*BJSM1+DN*BJSM/Z
      BYPM=-BYM1+DN*BYM/Z
      BYPSM=-SIG*BYSM1+DN*BYSM/Z
      BJPPM=BJM1/Z-(DN/(Z*Z)-(DN/Z)**2+1.D0)*BJM
      BYPPM=BYM1/Z-(DN/(Z*Z)-(DN/Z)**2+1.D0)*BYM
      BJPPSM=BJSM1*SIG/Z-(DN/(Z*Z)-(DN/Z)**2+SIG**2)*BJSM
      BYPPSM=BYSM1*SIG/Z-(DN/(Z*Z)-(DN/Z)**2+SIG**2)*BYSM
      BP=BJPPM*BYPSM+BJPM*BYPPSM-BJPPSM*BYPM-BJPSM*BYPPM
      GO TO 81
   80 CALL DBESJY(Z,1,BJ1,BY1,BJ2,BY2,IERR)
      ZS=SIG*Z
      CALL DBESJY(ZS,1,BJS1,BYS1,BJS2,BYS2,IERR)
      B=SIG*(BJ1*BYS1-BJS1*BY1)
```

```
      BP=SIG*BJ1*(-SIG*BYS2+BYS1/Z    )+SIG*BYS1*(-BJ2+BJ1/Z    )-SIG*
     ABJS1*(-BY2+BY1/Z    )-SIG*BY1*(-SIG*BJS2+BJS1/Z    )
      WRITE(6,4) B,BP
   81 CONTINUE
      IF(BP) 61,61,63
   61 INDN=-1
      GO TO 65
   63 INDP=1
   65 IND=INDN+INDP
      IF(IND.EQ.0) GO TO 70
      GO TO 60
   17 Z=3.0D0 / (1.D0 - SIG)
      I=1
   70 C(J+1)=Z+.1D0*DFLOAT(I)
   30 CONTINUE
      WRITE(6,90)
   90 FORMAT('1',10X,'ANNULAR DUCT EIGENVALUES',//)
      WRITE(6,91) SIG
   91 FORMAT(1H ,10X,'RADIUS RATIO =',D20.14//)
      WRITE(6,92) MW
   92 FORMAT(1H ,10X,'ANGULAR WAVE NUMBER =',I5)
      DO  94 I=1,NNZ
      NI=I-1
   94 WRITE(6,93)  NI,ROOT(I)
   93 FORMAT(1H ,10X,'RADIAL WAVE NUMBER =',I5,10X,'EIGENVALUE
     A KMN =',D25.16//)
      RETURN
C
C   -     -     -     CALCULATE VELOCITIES     -       -       -       -       -
        ENTRY  VELCAL (IA, BESM)
      NW=IA-1
      XKMN=ROOT(IA)
      IF((MW.EQ.0).AND.(NW.EQ.0)) GO TO 200
      CALL DBESJY(XKMN,MW,BJ,BY,BJJ,BYY,IERR)
      BJPM=-BJJ+DFLOAT(MW)*BJ/XKMN
      BYPM=-BYY+DFLOAT(MW)*BY/XKMN
C
C        CALCULATE THE MODAL EIGENFUNCTION CONSTANT QMN
      QMN=-BJPM/BYPM
      GO TO 210
  200 QMN=0.0D0
  210 CONTINUE
      WRITE(6,5)  QMN
    5 FORMAT(1H ,10X,'QMN =',D15.8/)
C
C        CALCULATE MODAL VELOCITY PROFILE ON THE DUCT FACE
      DO 50 I=1,NARG
      IF(I-1) 51,51,52
   51 R(I)=RARG(I)*BB/2.D0+ AINK
      GO TO 57
   52 IE=I-1
```

```
      R(I)=R(IE)+(RARG(IE)+RARG(I))*BB/2.DO
C     -   -     THIS CANNOT BE USED WITH CIRCULAR DUCT DATA    -    -     -
   57   IF (INK.EQ.0  .AND.  R(I).LT.AA)                GO TO 170
      BARG=R(I)*XKMN/BB
      IF((MW.EQ.0).AND.(NW.EQ.0)) GO TO 150
      CALL DBESJY(BARG,MW,BESJ,BESY,BUM,BUMM,IERR)
      GO TO 160
  150 BESJ=1.DO
      BESY=0.DO
  160 CONTINUE
      BESM(I)=BESJ+QMN*BESY
                                                        GO TO 50
  170 BESM(I) = 0.DO
   50 CONTINUE
      WRITE(6,55) NW
   55 FORMAT(1H ,10X,'VELOCITY DISTRIBUTION ACROSS THE DUCT FACE FOR RAD
     1IAL MODE NO=',I5)
      DO 54 J=1,NARG
   54 WRITE(6,53) RARG(J),R(J),BESM(J)
   53 FORMAT(1H ,'R DELTA',2X,D15.8,2X,'R ARGUMENT',2X,D15.8,2X,'VELOCIT
     AY DISTRIBUTION',2X,D15.8/)
   11 CONTINUE
      RETURN
      END


      SUBROUTINE  DBESJY(X,NO,BJ,BY,BJJ,BYY,IERR)
C                                                    ZDM915 88 - 25
      DOUBLE PRECISION DFLOAT,DLOG
      DOUBLE PRECISION J(350),J0,J1,J00
      DOUBLE PRECISION Y(80),Y0,Y1,X,C,BJ,BY,PI,RN,BJJ,BYY
      PI=3.14159265358979DO
      IF(X.GT.0.DO) GO TO 90
      IERR=0
      GO TO 80
   90 CONTINUE
      IERR=1
      FAC = 1.5
        IF (X .GT. 50.0)       FAC = .5
      NX=3.9+FAC*X
      J(2*NX+2)=0.DO
      J(2*NX+1)=1.D-29
      C=0.DO
      J0=0.DO
      J1=0.DO
      Y0=0.DO
      Y1=0.DO
      DO 20 NB=1,NX
      N=NX+1-NB
      RN=DFLOAT(N)
      J(2*N)=2.DO*(2.DO*RN+1.DO)*J(2*N+1)/X-J(2*N+2)
      J(2*N-1)=4.DO*RN*J(2*N)/X-J(2*N+1)
      Y0=Y0+(-1)**N*J(2*N)/RN
```

```
      Y1=Y1+(-1)**N*(2.D0*RN+1.D0)*J(2*N+1)/RN/(1.D0+RN)
   20 C=C+2.D0*J(2*N)
      J00=2.D0*J(1)/X-J(2)
      C=J00+C
      Y0=(DLOG(X/2.D0)+.5772156649015300)*J00-2.D0*Y0
      Y1=(DLOG(X/2.D0)-.4227843350984700)*J(1)-J00/X-Y1
      Y0=2.D0*Y0/C/PI
      Y1=2.D0*Y1/C/PI
      J0=J00/C
      Y(1)=Y1
      Y(2)=2.D0*Y(1)/X-Y0
      NNX=2+N0
      DO 30 I=1,NNX
      Y(I+2)=2.D0*DFLOAT(I+1)*Y(I+1)/X-Y(I)
   30 J(I)=J(I)/C
      IF(N0.EQ.0) GO TO 70
      BJ=J(N0)
      BY=Y(N0)
      NP=N0+1
      BJJ=J(NP)
      BYY=Y(NP)
      GO TO 80
   70 BJ=J0
      BY=Y0
      BJJ=J(1)
      BYY=Y(1)
   80 CONTINUE
      RETURN
      END
```

APPENDIX 8 – EXAMPLE PROBLEMS

LISTING OF INPUT DATA

```
 SEMI-INFINITE CIRCULAR DUCT
 +READ    PUNCH=T, OLD=F,                +END
301640 2 8 0 0 0 0
0.0          1.0          343.00       343.0        0.0001       0.03
0.0250       0.025        0.050        0.05         0.050        0.050        0.075
0.075        0.075        0.075        0.075        0.075        0.10         0.10
0.10         0.10         0.10         0.1          0.1          0.1          0.1
0.125        0.125        0.125        0.125        0.125        0.125        0.125
0.125        0.125        0.125        0.125        0.125        0.125        0.125
0.15         0.15         0.150        0.150        0.150
0.125        0.125        0.1000       0.0750       .0500000     0.0250       0.025
0.0500       0.0500       0.0750       0.0750       0.0750       0.0500       0.0500
0.025        0.025
01
1.0000       1.0000       1.0000       1.0000       1.0000       1.0000       1.0000
1.0000       1.0000       1.0000       1.0000       1.0000       1.0000       1.0000
1.0000       1.0000
       END
```

```
 SEMI-INFINITE ANNULAR DUCT
 +READ    PUNCH=T, OLD=F,                +END
301640 2 8 0 0 0 0
0.0          1.0          343.00       343.0        0.0001       0.03
0.0250       0.025        0.050        0.05         0.050        0.050        0.075
0.075        0.075        0.075        0.075        0.075        0.10         0.10
0.10         0.10         0.10         0.1          0.1          0.1          0.1
0.125        0.125        0.125        0.125        0.125        0.125        0.125
0.125        0.125        0.125        0.125        0.125        0.125        0.125
0.15         0.15         0.150        0.150        0.150
0.125        0.125        0.1000       0.0750       .0500000     0.0250       0.025
0.0500       0.0500       0.0750       0.0750       0.0750       0.0500       0.0500
0.025        0.025
01
0.0000       0.0000       0.0000       0.0000       0.0100       0.0000       1.0000
1.0000       1.0000       1.0000       1.0000       1.0000       1.0000       1.0000
1.0000       1.0000
       END
```

```
 SEMI-INF. ANN. DUCT WITH CENTERBODY
 +READ   PUNCH=T, OLD=F,                    +END
301010 2 8 0 1 010
0.5         1.0         343.00      343.0       0.0001      0.03
.025        .05         .075        .1          .125        .15         .175
.2          .225        .25
.025        .05         .075        .1          .125        .15         .175
.2          .225        .25
.025        .05         .05         .075        .075        .075        .05
.05         .025        .025
01
1.0000      1.0000      1.0000      1.0000      1.0000      1.0000      1.0000
1.0000      1.0000      1.0000
       END
```

```
 SEMI-INF. ANN. DUCT WITH CENTERBODY
 +READ   PUNCH=T, OLD=F,                    +END
301020 2 8 0 1 020
0.5         1.0         343.00      343.0       0.0001      0.03
.025        .025        .05         .075        .075        .075        .075
.075        .1          .125        .15         .175        .175        .2
.2          .2          .2          .2          .2          .2
.025        .025        .05         .075        .075        .075        .075
.075        .1          .125        .15         .175        .175        .2
.2          .2          .2          .2          .2          .2
.025        .025        .05         .075        .075        .075        .075
.05         .025        .025
01
1.0000      1.0000      1.0000      1.0000      1.0000      1.0000      1.0000
1.0000      1.0000      1.0000
       END
```

APPENDIX 8 – EXAMPLE PROBLEMS

OUTPUT FOR EXAMPLE PROBLEM 1

PRECEDING PAGE BLANK NOT FILMED

```
      BOX METHOD INTEGRATION FOR SOURCE DISTRIBUTION OVER DUCT

       SEMI-INFINITE CIRCULAR DUCT

      DUCT OR =      1.0000 FT      DUCT IR =     0.0     FT
     FREQUENCY =   343.0000 RAD/SEC      SOUND SPEED =   343.0000   FT/SEC
     MODE NUMBER =   0


+PRNT 1
L=          30, M=          16, N=          40, NN=          2, LP=          8
+END
+PRNT 2
N2=           0, INK=           0, CHK= 0.99999990E-04, XANG= 0.29999997E-01
+END

      BLOCK SIZE IN THE -Z DIRECTION NORMALIZED WITH RESPECT TO B.
            0.2500E-01      0.2500E-01      0.5000E-01      0.5000E-01
            0.5000E-01      0.5000E-01      0.7500E-01      0.7500E-01
            0.7500E-01      0.7500E-01      0.7500E-01      0.7500E-01
            0.1000E 00      0.1000E 00      0.1000E 00      0.1000E 00
            0.1000E 00      0.1000E 00      0.1000E 00      0.1000E 00
            0.1000E 00      0.1250E 00      0.1250E 00      0.1250E 00
            0.1250E 00      0.1250E 00      0.1250E 00      0.1250E 00
            0.1250E 00      0.1250E 00      0.1250E 00      0.1250E 00
            0.1250E 00      0.1250E 00      0.1250E 00      0.1500E 00
            0.1500E 00      0.1500E 00      0.1500E 00      0.1500E 00

      BLOCK SIZE IN THE R  DIRECTION NORMALIZED WITH RESPECT TO B.
            0.1250E 00      0.1250E 00      0.1000E 00      0.7500E-01
            0.5000E-01      0.2500E-01      0.2500E-01      0.5000E-01
            0.5000E-01      0.7500E-01      0.7500E-01      0.7500E-01
            0.5000E-01      0.5000E-01      0.2500E-01      0.2500E-01


       BLOCK NO   1      RADIUS =      0.0625

         1          6.2832    +        0.0      I
         2          0.0       +        0.0      I
         3          0.0       +        0.0      I
         4          0.0       +        0.0      I
         5          0.0       +        0.0      I
         6          0.0       +        0.0      I
         7          0.0       +        0.0      I
         8          0.0       +        0.0      I
         9          0.0       +        0.0      I
        10          0.0       +        0.0      I
        11          0.0       +        0.0      I
        12          0.0       +        0.0      I
        13          0.0       +        0.0      I
        14          0.0       +        0.0      I
        15          0.0       +        0.0      I
```

16	0.0	+	0.0	I		
17	0.0027	+	0.0006	I	Z =	-0.0125
18	0.0082	+	0.0018	I	Z =	-0.0375
19	0.0325	+	0.0071	I	Z =	-0.0750
20	0.0535	+	0.0118	I	Z =	-0.1250
21	0.0734	+	0.0165	I	Z =	-0.1750
22	0.0920	+	0.0212	I	Z =	-0.2250
23	0.1694	+	0.0404	I	Z =	-0.2875
24	0.2016	+	0.0507	I	Z =	-0.3625
25	0.2273	+	0.0608	I	Z =	-0.4375
26	0.2466	+	0.0707	I	Z =	-0.5125
27	0.2600	+	0.0804	I	Z =	-0.5875
28	0.2681	+	0.0898	I	Z =	-0.6625
29	0.3624	+	0.1338	I	Z =	-0.7500
30	0.3601	+	0.1491	I	Z =	-0.8500
31	0.3512	+	0.1635	I	Z =	-0.9500
32	0.3374	+	0.1769	I	Z =	-1.0500
33	0.3202	+	0.1892	I	Z =	-1.1500
34	0.3004	+	0.2004	I	Z =	-1.2500
35	0.2790	+	0.2104	I	Z =	-1.3500
36	0.2565	+	0.2192	I	Z =	-1.4500
37	0.2334	+	0.2266	I	Z =	-1.5500
38	0.2587	+	0.2917	I	Z =	-1.6625
39	0.2219	+	0.2986	I	Z =	-1.7875
40	0.1854	+	0.3029	I	Z =	-1.9125
41	0.1496	+	0.3044	I	Z =	-2.0375
42	0.1147	+	0.3033	I	Z =	-2.1625
43	0.0809	+	0.2995	I	Z =	-2.2875
44	0.0486	+	0.2932	I	Z =	-2.4125
45	0.0178	+	0.2846	I	Z =	-2.5375
46	-0.0112	+	0.2736	I	Z =	-2.6625
47	-0.0382	+	0.2605	I	Z =	-2.7875
48	-0.0632	+	0.2454	I	Z =	-2.9125
49	-0.0859	+	0.2286	I	Z =	-3.0375
50	-0.1063	+	0.2103	I	Z =	-3.1625
51	-0.1243	+	0.1906	I	Z =	-3.2875
52	-0.1694	+	0.2013	I	Z =	-3.4250
53	-0.1873	+	0.1700	I	Z =	-3.5750
54	-0.2008	+	0.1379	I	Z =	-3.7250
55	-0.2098	+	0.1054	I	Z =	-3.8750
56	-0.2145	+	0.0731	I	Z =	-4.0250

BLOCK NO 2 RADIUS = 0.1875

1	0.0	+	0.0	I
2	6.2832	+	0.0	I
3	0.0	+	0.0	I
4	0.0	+	0.0	I
5	0.0	+	0.0	I
6	0.0	+	0.0	I
7	0.0	+	0.0	I

8	0.0	+	0.0	I		
9	0.0	+	0.0	I		
10	0.0	+	0.0	I		
11	0.0	+	0.0	I		
12	0.0	+	0.0	I		
13	0.0	+	0.0	I		
14	0.0	+	0.0	I		
15	0.0	+	0.0	I		
16	0.0	+	0.0	I		
17	0.0029	+	0.0006	I	Z =	-0.0125
18	0.0086	+	0.0018	I	Z =	-0.0375
19	0.0343	+	0.0071	I	Z =	-0.0750
20	0.0563	+	0.0118	I	Z =	-0.1250
21	0.0772	+	0.0164	I	Z =	-0.1750
22	0.0965	+	0.0211	I	Z =	-0.2250
23	0.1768	+	0.0403	I	Z =	-0.2875
24	0.2092	+	0.0506	I	Z =	-0.3625
25	0.2345	+	0.0607	I	Z =	-0.4375
26	0.2530	+	0.0705	I	Z =	-0.5125
27	0.2653	+	0.0802	I	Z =	-0.5875
28	0.2723	+	0.0895	I	Z =	-0.6625
29	0.3664	+	0.1334	I	Z =	-0.7500
30	0.3624	+	0.1486	I	Z =	-0.8500
31	0.3522	+	0.1630	I	Z =	-0.9500
32	0.3375	+	0.1764	I	Z =	-1.0500
33	0.3195	+	0.1887	I	Z =	-1.1500
34	0.2993	+	0.1998	I	Z =	-1.2500
35	0.2777	+	0.2098	I	Z =	-1.3500
36	0.2550	+	0.2185	I	Z =	-1.4500
37	0.2318	+	0.2259	I	Z =	-1.5500
38	0.2568	+	0.2908	I	Z =	-1.6625
39	0.2200	+	0.2977	I	Z =	-1.7875
40	0.1837	+	0.3018	I	Z =	-1.9125
41	0.1480	+	0.3033	I	Z =	-2.0375
42	0.1132	+	0.3022	I	Z =	-2.1625
43	0.0796	+	0.2984	I	Z =	-2.2875
44	0.0474	+	0.2922	I	Z =	-2.4125
45	0.0168	+	0.2835	I	Z =	-2.5375
46	-0.0120	+	0.2725	I	Z =	-2.6625
47	-0.0390	+	0.2594	I	Z =	-2.7875
48	-0.0638	+	0.2444	I	Z =	-2.9125
49	-0.0864	+	0.2276	I	Z =	-3.0375
50	-0.1067	+	0.2093	I	Z =	-3.1625
51	-0.1246	+	0.1897	I	Z =	-3.2875
52	-0.1696	+	0.2002	I	Z =	-3.4250
53	-0.1874	+	0.1690	I	Z =	-3.5750
54	-0.2008	+	0.1369	I	Z =	-3.7250
55	-0.2097	+	0.1045	I	Z =	-3.8750
56	-0.2143	+	0.0723	I	Z =	-4.0250

BLOCK NO 3 RADIUS = C.3000

1	0.0	+	0.0	I		
2	0.0	+	0.C	I		
3	6.2832	+	0.0	I		
4	0.0	+	0.0	I		
5	0.0	+	0.C	I		
6	0.0	+	0.C	I		
7	0.0	+	0.0	I		
8	0.0	+	0.0	I		
9	0.0	+	0.0	I		
10	0.0	+	0.0	I		
11	C.0	+	0.0	I		
12	0.0	+	0.0	I		
13	0.0	+	0.0	I		
14	0.0	+	0.0	I		
15	0.0	+	0.0	I		
16	C.0	+	0.0	I		
17	0.0032	+	0.0006	I	Z =	-0.0125
18	0.0096	+	0.0018	I	Z =	-0.0375
19	0.0379	+	0.007C	I	Z =	-0.0750
20	0.0620	+	0.C117	I	Z =	-0.1250
21	0.0846	+	0.C164	I	Z =	-0.1750
22	0.1051	+	0.C210	I	Z =	-0.2250
23	0.1910	+	0.0401	I	Z =	-0.2875
24	C.2235	+	0.C503	I	Z =	-0.3625
25	C.2478	+	0.C603	I	Z =	-0.4375
26	0.2645	+	0.0702	I	Z =	-0.5125
27	0.2747	+	0.0797	I	Z =	-0.5875
28	0.2796	+	0.C890	I	Z =	-0.6625
29	0.3729	+	0.1327	I	Z =	-0.7500
30	0.3661	+	0.1478	I	Z =	-0.8500
31	0.3536	+	0.1621	I	Z =	-0.9500
32	0.3373	+	0.1754	I	Z =	-1.0500
33	0.3182	+	0.1876	I	Z =	-1.1500
34	0.2973	+	0.1987	I	Z =	-1.2500
35	0.2752	+	0.2086	I	Z =	-1.3500
36	0.2523	+	0.2173	I	Z =	-1.4500
37	0.2290	+	0.2246	I	Z =	-1.5500
38	0.2533	+	0.2891	I	Z =	-1.6625
39	0.2167	+	0.2959	I	Z =	-1.7875
40	0.1806	+	0.3001	I	Z =	-1.9125
41	0.1451	+	0.3015	I	Z =	-2.0375
42	0.1106	+	0.3003	I	Z =	-2.1625
43	0.0773	+	0.2966	I	Z =	-2.2875
44	0.0454	+	0.2903	I	Z =	-2.4125
45	0.C150	+	0.2816	I	Z =	-2.5375
46	-0.0136	+	0.2706	I	Z =	-2.6625
47	-0.0402	+	0.2576	I	Z =	-2.7875
48	-0.0649	+	0.2426	I	Z =	-2.9125
49	-0.0873	+	0.2258	I	Z =	-3.0375
50	-0.1074	+	0.2076	I	Z =	-3.1625

51	-0.1251	+	0.1880	I	Z =	-3.2875
52	-0.1700	+	0.1983	I	Z =	-3.4250
53	-0.1875	+	0.1672	I	Z =	-3.5750
54	-0.2007	+	0.1353	I	Z =	-3.7250
55	-0.2095	+	0.1030	I	Z =	-3.8750
56	-0.2139	+	0.0709	I	Z =	-4.0250

BLOCK NO 4 RADIUS = 0.3875

1	0.0	+	0.0	I		
2	0.0	+	0.0	I		
3	0.0	+	0.0	I		
4	6.2832	+	0.0	I		
5	0.0	+	0.0	I		
6	0.0	+	0.0	I		
7	0.0	+	0.0	I		
8	0.0	+	0.0	I		
9	0.0	+	0.0	I		
10	0.0	+	0.0	I		
11	0.0	+	0.0	I		
12	0.0	+	0.0	I		
13	0.0	+	0.0	I		
14	0.0	+	0.0	I		
15	0.0	+	0.0	I		
16	0.0	+	0.0	I		
17	0.0036	+	0.0000	I	Z =	-0.0125
18	0.0108	+	0.0017	I	Z =	-0.0375
19	0.0427	+	0.0070	I	Z =	-0.0750
20	0.0695	+	0.0116	I	Z =	-0.1250
21	0.0942	+	0.0163	I	Z =	-0.1750
22	0.1161	+	0.0209	I	Z =	-0.2250
23	0.2086	+	0.0399	I	Z =	-0.2875
24	0.2408	+	0.0500	I	Z =	-0.3625
25	0.2633	+	0.0600	I	Z =	-0.4375
26	0.2775	+	0.0698	I	Z =	-0.5125
27	0.2850	+	0.0793	I	Z =	-0.5875
28	0.2872	+	0.0885	I	Z =	-0.6625
29	0.3796	+	0.1319	I	Z =	-0.7500
30	0.3695	+	0.1470	I	Z =	-0.8500
31	0.3547	+	0.1612	I	Z =	-0.9500
32	0.3366	+	0.1744	I	Z =	-1.0500
33	0.3164	+	0.1865	I	Z =	-1.1500
34	0.2948	+	0.1975	I	Z =	-1.2500
35	0.2723	+	0.2073	I	Z =	-1.3500
36	0.2492	+	0.2159	I	Z =	-1.4500
37	0.2259	+	0.2232	I	Z =	-1.5500
38	0.2495	+	0.2873	I	Z =	-1.6625
39	0.2131	+	0.2940	I	Z =	-1.7875
40	0.1771	+	0.2981	I	Z =	-1.9125
41	0.1420	+	0.2995	I	Z =	-2.0375
42	0.1078	+	0.2983	I	Z =	-2.1625

43	0.0748	+	0.2945	I	Z =	-2.2875
44	0.0432	+	0.2882	I	Z =	-2.4125
45	0.0131	+	0.2795	I	Z =	-2.5375
46	-0.0152	+	0.2686	I	Z =	-2.6625
47	-0.0416	+	0.2556	I	Z =	-2.7875
48	-0.0660	+	0.2406	I	Z =	-2.9125
49	-0.0882	+	0.2239	I	Z =	-3.0375
50	-0.1081	+	0.2057	I	Z =	-3.1625
51	-0.1256	+	0.1862	I	Z =	-3.2875
52	-0.1703	+	0.1962	I	Z =	-3.4250
53	-0.1877	+	0.1653	I	Z =	-3.5750
54	-0.2006	+	0.1335	I	Z =	-3.7250
55	-0.2092	+	0.1013	I	Z =	-3.8750
56	-0.2135	+	0.0694	I	Z =	-4.0250

BLOCK NO 5 RADIUS = 0.4500

1	0.0	+	0.0	I		
2	0.0	+	0.0	I		
3	0.0	+	0.0	I		
4	0.0	+	0.0	I		
5	6.2832	+	0.0	I		
6	0.0	+	0.0	I		
7	0.0	+	0.0	I		
8	0.0	+	0.0	I		
9	0.0	+	0.0	I		
10	0.0	+	0.0	I		
11	0.0	+	0.0	I		
12	0.0	+	0.0	I		
13	0.0	+	0.0	I		
14	0.0	+	0.0	I		
15	0.0	+	0.0	I		
16	0.0	+	0.0	I		
17	0.0040	+	0.0006	I	Z =	-0.0125
18	0.0121	+	0.0017	I	Z =	-0.0375
19	0.0477	+	0.0070	I	Z =	-0.0750
20	0.0773	+	0.0116	I	Z =	-0.1250
21	0.1040	+	0.0162	I	Z =	-0.1750
22	0.1272	+	0.0208	I	Z =	-0.2250
23	0.2260	+	0.0397	I	Z =	-0.2875
24	0.2571	+	0.0498	I	Z =	-0.3625
25	0.2774	+	0.0597	I	Z =	-0.4375
26	0.2890	+	0.0694	I	Z =	-0.5125
27	0.2938	+	0.0789	I	Z =	-0.5875
28	0.2936	+	0.0881	I	Z =	-0.6625
29	0.3849	+	0.1312	I	Z =	-0.7500
30	0.3720	+	0.1462	I	Z =	-0.8500
31	0.3551	+	0.1603	I	Z =	-0.9500
32	0.3357	+	0.1735	I	Z =	-1.0500
33	0.3147	+	0.1855	I	Z =	-1.1500
34	0.2925	+	0.1965	I	Z =	-1.2500

35	0.2697	+	0.2062	I	Z =	-1.3500
36	0.2465	+	0.2148	I	Z =	-1.4500
37	0.2231	+	0.2220	I	Z =	-1.5500
38	0.2461	+	0.2857	I	Z =	-1.6625
39	0.2099	+	0.2924	I	Z =	-1.7875
40	0.1742	+	0.2964	I	Z =	-1.9125
41	0.1393	+	0.2978	I	Z =	-2.0375
42	0.1054	+	0.2965	I	Z =	-2.1625
43	0.0726	+	0.2927	I	Z =	-2.2875
44	0.0412	+	0.2864	I	Z =	-2.4125
45	0.0114	+	0.2777	I	Z =	-2.5375
46	-0.0167	+	0.2668	I	Z =	-2.6625
47	-0.0429	+	0.2538	I	Z =	-2.7875
48	-0.0670	+	0.2389	I	Z =	-2.9125
49	-0.0890	+	0.2222	I	Z =	-3.0375
50	-0.1087	+	0.2041	I	Z =	-3.1625
51	-0.1260	+	0.1846	I	Z =	-3.2875
52	-0.1707	+	0.1944	I	Z =	-3.4250
53	-0.1878	+	0.1636	I	Z =	-3.5750
54	-0.2005	+	0.1319	I	Z =	-3.7250
55	-0.2090	+	0.0999	I	Z =	-3.8750
56	-0.2131	+	0.0681	I	Z =	-4.0250

BLOCK NO 6 RADIUS = 0.4875

1	0.0	+	0.0	I		
2	0.0	+	0.0	I		
3	0.0	+	0.0	I		
4	0.0	+	0.0	I		
5	0.0	+	0.0	I		
6	6.2832	+	0.0	I		
7	0.0	+	0.0	I		
8	0.0	+	0.0	I		
9	0.0	+	0.0	I		
10	0.0	+	0.0	I		
11	0.0	+	0.0	I		
12	0.0	+	0.0	I		
13	0.0	+	0.0	I		
14	0.0	+	0.0	I		
15	0.0	+	0.0	I		
16	0.0	+	0.0	I		
17	0.0044	+	0.0006	I	Z =	-0.0125
18	0.0131	+	0.0017	I	Z =	-0.0375
19	0.0516	+	0.0069	I	Z =	-0.0750
20	0.0834	+	0.0115	I	Z =	-0.1250
21	0.1116	+	0.0161	I	Z =	-0.1750
22	0.1356	+	0.0207	I	Z =	-0.2250
23	0.2388	+	0.0395	I	Z =	-0.2875
24	0.2689	+	0.0496	I	Z =	-0.3625
25	0.2873	+	0.0595	I	Z =	-0.4375
26	0.2967	+	0.0692	I	Z =	-0.5125

27	0.2996	+	0.0786	I	Z =	-0.5875
28	0.2976	+	0.0878	I	Z =	-0.6625
29	0.3881	+	0.1308	I	Z =	-0.7500
30	0.3734	+	0.1457	I	Z =	-0.8500
31	0.3552	+	0.1598	I	Z =	-0.9500
32	0.3350	+	0.1729	I	Z =	-1.0500
33	0.3133	+	0.1849	I	Z =	-1.1500
34	0.2909	+	0.1958	I	Z =	-1.2500
35	0.2679	+	0.2055	I	Z =	-1.3500
36	0.2446	+	0.2140	I	Z =	-1.4500
37	0.2213	+	0.2212	I	Z =	-1.5500
38	0.2438	+	0.2847	I	Z =	-1.6625
39	0.2077	+	0.2913	I	Z =	-1.7875
40	0.1722	+	0.2953	I	Z =	-1.9125
41	0.1375	+	0.2966	I	Z =	-2.0375
42	0.1037	+	0.2954	I	Z =	-2.1625
43	0.0712	+	0.2915	I	Z =	-2.2875
44	0.0400	+	0.2852	I	Z =	-2.4125
45	0.0103	+	0.2766	I	Z =	-2.5375
46	-0.0176	+	0.2656	I	Z =	-2.6625
47	-0.0437	+	0.2526	I	Z =	-2.7875
48	-0.0677	+	0.2377	I	Z =	-2.9125
49	-0.0895	+	0.2211	I	Z =	-3.0375
50	-0.1091	+	0.2030	I	Z =	-3.1625
51	-0.1263	+	0.1836	I	Z =	-3.2875
52	-0.1709	+	0.1932	I	Z =	-3.4250
53	-0.1879	+	0.1624	I	Z =	-3.5750
54	-0.2005	+	0.1308	I	Z =	-3.7250
55	-0.2088	+	0.0989	I	Z =	-3.8750
56	-0.2129	+	0.0672	I	Z =	-4.0250

BLOCK NO 7 RADIUS = 0.5125

1	0.0	+	0.0	I		
2	0.0	+	0.0	I		
3	0.0	+	0.0	I		
4	0.0	+	0.0	I		
5	0.0	+	0.0	I		
6	0.0	+	0.0	I		
7	6.2832	+	0.0	I		
8	0.0	+	0.0	I		
9	0.0	+	0.0	I		
10	0.0	+	0.0	I		
11	0.0	+	0.0	I		
12	0.0	+	0.0	I		
13	0.0	+	0.0	I		
14	0.0	+	0.0	I		
15	0.0	+	0.0	I		
16	0.0	+	0.0	I		
17	0.0047	+	0.0006	I	Z =	-0.0125
18	0.0139	+	0.0017	I	Z =	-0.0375

19	0.0548	+	0.0069	I	Z =	-0.0750
20	0.0882	+	0.0115	I	Z =	-0.1250
21	0.1175	+	0.0161	I	Z =	-0.1750
22	0.1421	+	0.0206	I	Z =	-0.2250
23	0.2484	+	0.0394	I	Z =	-0.2875
24	0.2776	+	0.0495	I	Z =	-0.3625
25	0.2945	+	0.0593	I	Z =	-0.4375
26	0.3023	+	0.0690	I	Z =	-0.5125
27	0.3036	+	0.0784	I	Z =	-0.5875
28	0.3003	+	0.0876	I	Z =	-0.6625
29	0.3902	+	0.1304	I	Z =	-0.7500
30	0.3742	+	0.1454	I	Z =	-0.8500
31	0.3552	+	0.1594	I	Z =	-0.9500
32	0.3343	+	0.1724	I	Z =	-1.0500
33	0.3123	+	0.1844	I	Z =	-1.1500
34	0.2897	+	0.1953	I	Z =	-1.2500
35	0.2666	+	0.2050	I	Z =	-1.3500
36	0.2433	+	0.2135	I	Z =	-1.4500
37	0.2199	+	0.2206	I	Z =	-1.5500
38	0.2422	+	0.2839	I	Z =	-1.6625
39	0.2062	+	0.2905	I	Z =	-1.7875
40	0.1708	+	0.2945	I	Z =	-1.9125
41	0.1362	+	0.2958	I	Z =	-2.0375
42	0.1026	+	0.2945	I	Z =	-2.1625
43	0.0701	+	0.2907	I	Z =	-2.2875
44	0.0391	+	0.2844	I	Z =	-2.4125
45	0.0095	+	0.2757	I	Z =	-2.5375
46	-0.0183	+	0.2648	I	Z =	-2.6625
47	-0.0442	+	0.2518	I	Z =	-2.7875
48	-0.0681	+	0.2369	I	Z =	-2.9125
49	-0.0899	+	0.2203	I	Z =	-3.0375
50	-0.1094	+	0.2022	I	Z =	-3.1625
51	-0.1265	+	0.1828	I	Z =	-3.2875
52	-0.1710	+	0.1924	I	Z =	-3.4250
53	-0.1879	+	0.1616	I	Z =	-3.5750
54	-0.2004	+	0.1301	I	Z =	-3.7250
55	-0.2087	+	0.0982	I	Z =	-3.8750
56	-0.2127	+	0.0665	I	Z =	-4.0250

BLOCK NO 8 RADIUS = 0.5500

1	0.0	+	0.0	I
2	0.0	+	0.0	I
3	0.0	+	0.0	I
4	0.0	+	0.0	I
5	0.0	+	0.0	I
6	0.0	+	0.0	I
7	0.0	+	0.0	I
8	6.2832	+	0.0	I
9	0.0	+	0.0	I
10	0.0	+	0.0	I

11	0.0	+	0.0	I			
12	0.0	+	0.0	I			
13	0.0	+	0.0	I			
14	0.0	+	0.0	I			
15	0.0	+	0.0	I			
16	0.0	+	0.0	I			
17	0.0052	+	0.0006	I	Z =	-0.0125	
18	0.0154	+	0.0017	I	Z =	-0.0375	
19	0.0605	+	0.0069	I	Z =	-0.0750	
20	0.0968	+	0.0115	I	Z =	-0.1250	
21	0.1280	+	0.0160	I	Z =	-0.1750	
22	0.1533	+	0.0206	I	Z =	-0.2250	
23	0.2649	+	0.0293	I	Z =	-0.2875	
24	0.2920	+	0.0493	I	Z =	-0.3625	
25	0.3061	+	0.0591	I	Z =	-0.4375	
26	0.3110	+	0.0687	I	Z =	-0.5125	
27	0.3098	+	0.0781	I	Z =	-0.5875	
28	0.3045	+	0.0872	I	Z =	-0.6625	
29	0.3933	+	0.1299	I	Z =	-0.7500	
30	0.3753	+	0.1448	I	Z =	-0.8500	
31	0.3549	+	0.1588	I	Z =	-0.9500	
32	0.3332	+	0.1717	I	Z =	-1.0500	
33	0.3107	+	0.1837	I	Z =	-1.1500	
34	0.2877	+	0.1945	I	Z =	-1.2500	
35	0.2644	+	0.2042	I	Z =	-1.3500	
36	0.2411	+	0.2126	I	Z =	-1.4500	
37	0.2178	+	0.2197	I	Z =	-1.5500	
38	0.2396	+	0.2827	I	Z =	-1.6625	
39	0.2038	+	0.2893	I	Z =	-1.7875	
40	0.1686	+	0.2932	I	Z =	-1.9125	
41	0.1342	+	0.2945	I	Z =	-2.0375	
42	0.1007	+	0.2932	I	Z =	-2.1625	
43	0.0685	+	0.2894	I	Z =	-2.2875	
44	0.0376	+	0.2830	I	Z =	-2.4125	
45	0.0083	+	0.2744	I	Z =	-2.5375	
46	-0.0193	+	0.2635	I	Z =	-2.6625	
47	-0.0451	+	0.2505	I	Z =	-2.7875	
48	-0.0689	+	0.2356	I	Z =	-2.9125	
49	-0.0905	+	0.2190	I	Z =	-3.0375	
50	-0.1098	+	0.2010	I	Z =	-3.1625	
51	-0.1268	+	0.1816	I	Z =	-3.2875	
52	-0.1712	+	0.1910	I	Z =	-3.4250	
53	-0.1880	+	0.1604	I	Z =	-3.5750	
54	-0.2004	+	0.1289	I	Z =	-3.7250	
55	-0.2085	+	0.0971	I	Z =	-3.8750	
56	-0.2124	+	0.0656	I	Z =	-4.0250	

BLOCK NO 9 RADIUS = 0.6000

1	0.0	+	0.0	I
2	0.0	+	0.0	I

3	0.0	+	0.0	I		
4	0.0	+	0.0	I		
5	0.0	+	0.0	I		
6	0.0	+	0.0	I		
7	0.0	+	0.0	I		
8	0.0	+	0.0	I		
9	6.2832	+	0.0	I		
10	0.0	+	0.0	I		
11	0.0	+	0.0	I		
12	0.0	+	0.0	I		
13	0.0	+	0.0	I		
14	0.0	+	0.0	I		
15	0.0	+	0.0	I		
16	0.0	+	0.0	I		
17	0.0061	+	0.0006	I	Z =	-0.0125
18	0.0181	+	0.0017	I	Z =	-0.0375
19	0.0706	+	0.0069	I	Z =	-0.0750
20	0.1118	+	0.0114	I	Z =	-0.1250
21	0.1458	+	0.0159	I	Z =	-0.1750
22	0.1719	+	0.0205	I	Z =	-0.2250
23	0.2912	+	0.0391	I	Z =	-0.2875
24	0.3140	+	0.0490	I	Z =	-0.3625
25	0.3231	+	0.0588	I	Z =	-0.4375
26	0.3234	+	0.0684	I	Z =	-0.5125
27	0.3183	+	0.0777	I	Z =	-0.5875
28	0.3099	+	0.0867	I	Z =	-0.6625
29	0.3970	+	0.1292	I	Z =	-0.7500
30	0.3762	+	0.1440	I	Z =	-0.8500
31	0.3541	+	0.1578	I	Z =	-0.9500
32	0.3312	+	0.1708	I	Z =	-1.0500
33	0.3080	+	0.1826	I	Z =	-1.1500
34	0.2847	+	0.1934	I	Z =	-1.2500
35	0.2613	+	0.2030	I	Z =	-1.3500
36	0.2379	+	0.2113	I	Z =	-1.4500
37	0.2146	+	0.2184	I	Z =	-1.5500
38	0.2358	+	0.2810	I	Z =	-1.6625
39	0.2003	+	0.2875	I	Z =	-1.7875
40	0.1653	+	0.2914	I	Z =	-1.9125
41	0.1312	+	0.2926	I	Z =	-2.0375
42	0.0981	+	0.2913	I	Z =	-2.1625
43	0.0662	+	0.2874	I	Z =	-2.2875
44	0.0356	+	0.2811	I	Z =	-2.4125
45	0.0065	+	0.2724	I	Z =	-2.5375
46	-0.0209	+	0.2615	I	Z =	-2.6625
47	-0.0464	+	0.2486	I	Z =	-2.7875
48	-0.0699	+	0.2337	I	Z =	-2.9125
49	-0.0913	+	0.2172	I	Z =	-3.0375
50	-0.1105	+	0.1992	I	Z =	-3.1625
51	-0.1273	+	0.1799	I	Z =	-3.2875
52	-0.1716	+	0.1891	I	Z =	-3.4250
53	-0.1881	+	0.1585	I	Z =	-3.5750
54	-0.2003	+	0.1272	I	Z =	-3.7250
55	-0.2082	+	0.0956	I	Z =	-3.8750

56	-0.2120	+	0.0641	I	Z =	-4.0250

BLOCK NO 10 RADIUS = 0.6625

1	0.0	+	0.0	I		
2	0.0	+	0.0	I		
3	0.0	+	0.0	I		
4	0.0	+	0.0	I		
5	0.0	+	0.0	I		
6	0.0	+	0.0	I		
7	0.0	+	0.0	I		
8	0.0	+	0.0	I		
9	0.0	+	0.0	I		
10	6.2832	+	0.0	I		
11	0.0	+	0.0	I		
12	0.0	+	0.0	I		
13	0.0	+	0.0	I		
14	0.0	+	0.0	I		
15	0.0	+	0.0	I		
16	0.0	+	0.0	I		
17	0.0078	+	0.0006	I	Z =	-0.0125
18	0.0232	+	0.0017	I	Z =	-0.0375
19	0.0895	+	0.0068	I	Z =	-0.0750
20	0.1390	+	0.0113	I	Z =	-0.1250
21	0.1766	+	0.0158	I	Z =	-0.1750
22	0.2027	+	0.0203	I	Z =	-0.2250
23	0.3322	+	0.0388	I	Z =	-0.2875
24	0.3461	+	0.0486	I	Z =	-0.3625
25	0.3464	+	0.0583	I	Z =	-0.4375
26	0.3394	+	0.0678	I	Z =	-0.5125
27	0.3287	+	0.0771	I	Z =	-0.5875
28	0.3162	+	0.0861	I	Z =	-0.6625
29	0.4008	+	0.1282	I	Z =	-0.7500
30	0.3765	+	0.1429	I	Z =	-0.8500
31	0.3522	+	0.1566	I	Z =	-0.9500
32	0.3280	+	0.1694	I	Z =	-1.0500
33	0.3040	+	0.1812	I	Z =	-1.1500
34	0.2803	+	0.1918	I	Z =	-1.2500
35	0.2568	+	0.2013	I	Z =	-1.3500
36	0.2334	+	0.2096	I	Z =	-1.4500
37	0.2103	+	0.2166	I	Z =	-1.5500
38	0.2307	+	0.2787	I	Z =	-1.6625
39	0.1955	+	0.2851	I	Z =	-1.7875
40	0.1609	+	0.2889	I	Z =	-1.9125
41	0.1272	+	0.2901	I	Z =	-2.0375
42	0.0945	+	0.2887	I	Z =	-2.1625
43	0.0630	+	0.2848	I	Z =	-2.2875
44	0.0328	+	0.2784	I	Z =	-2.4125
45	0.0041	+	0.2698	I	Z =	-2.5375
46	-0.0229	+	0.2589	I	Z =	-2.6625
47	-0.0481	+	0.2460	I	Z =	-2.7875

48	-0.0713	+	0.2312	I	Z =	-2.9125
49	-0.0925	+	0.2147	I	Z =	-3.0375
50	-0.1113	+	0.1968	I	Z =	-3.1625
51	-0.1279	+	0.1776	I	Z =	-3.2875
52	-0.1720	+	0.1864	I	Z =	-3.4250
53	-0.1882	+	0.1560	I	Z =	-3.5750
54	-0.2001	+	0.1249	I	Z =	-3.7250
55	-0.2078	+	0.0934	I	Z =	-3.8750
56	-0.2114	+	0.0622	I	Z =	-4.0250

BLOCK NO 11 RADIUS = 0.7375

1	0.0	+	0.0	I		
2	0.0	+	0.0	I		
3	0.0	+	0.0	I		
4	0.0	+	0.0	I		
5	0.0	+	0.0	I		
6	0.0	+	0.0	I		
7	0.0	+	0.0	I		
8	0.0	+	0.0	I		
9	0.0	+	0.0	I		
10	0.0	+	0.0	I		
11	6.2832	+	0.0	I		
12	0.0	+	0.0	I		
13	0.0	+	0.0	I		
14	0.0	+	0.0	I		
15	0.0	+	0.0	I		
16	0.0	+	0.0	I		
17	0.0117	+	0.0006	I	Z =	-0.0125
18	0.0344	+	0.0017	I	Z =	-0.0375
19	0.1298	+	0.0067	I	Z =	-0.0750
20	0.1930	+	0.0112	I	Z =	-0.1250
21	0.2333	+	0.0157	I	Z =	-0.1750
22	0.2546	+	0.0201	I	Z =	-0.2250
23	0.3949	+	0.0384	I	Z =	-0.2875
24	0.3904	+	0.0481	I	Z =	-0.3625
25	0.3758	+	0.0577	I	Z =	-0.4375
26	0.3580	+	0.0671	I	Z =	-0.5125
27	0.3397	+	0.0763	I	Z =	-0.5875
28	0.3219	+	0.0852	I	Z =	-0.6625
29	0.4031	+	0.1269	I	Z =	-0.7500
30	0.3749	+	0.1414	I	Z =	-0.8500
31	0.3482	+	0.1550	I	Z =	-0.9500
32	0.3228	+	0.1676	I	Z =	-1.0500
33	0.2981	+	0.1793	I	Z =	-1.1500
34	0.2741	+	0.1898	I	Z =	-1.2500
35	0.2505	+	0.1992	I	Z =	-1.3500
36	0.2273	+	0.2073	I	Z =	-1.4500
37	0.2044	+	0.2143	I	Z =	-1.5500
38	0.2238	+	0.2756	I	Z =	-1.6625
39	0.1891	+	0.2819	I	Z =	-1.7875

40	0.1551	+	0.2856	I	Z =	-1.9125
41	0.1220	+	0.2867	I	Z =	-2.0375
42	0.0899	+	0.2852	I	Z =	-2.1625
43	0.0588	+	0.2813	I	Z =	-2.2875
44	0.0292	+	0.2750	I	Z =	-2.4125
45	0.0009	+	0.2663	I	Z =	-2.5375
46	-0.0256	+	0.2554	I	Z =	-2.6625
47	-0.0504	+	0.2426	I	Z =	-2.7875
48	-0.0732	+	0.2279	I	Z =	-2.9125
49	-0.0939	+	0.2115	I	Z =	-3.0375
50	-0.1124	+	0.1936	I	Z =	-3.1625
51	-0.1287	+	0.1746	I	Z =	-3.2875
52	-0.1425	+	0.1829	I	Z =	-3.4250
53	-0.1983	+	0.1528	I	Z =	-3.5750
54	-0.1999	+	0.1218	I	Z =	-3.7250
55	-0.2073	+	0.0906	I	Z =	-3.8750
56	-0.2106	+	0.0596	I	Z =	-4.0250

BLOCK NO 12 RADIUS = 0.8125

1	0.0	+	0.0	I		
2	0.0	+	0.0	I		
3	0.0	+	0.0	I		
4	0.0	+	0.0	I		
5	0.0	+	0.0	I		
6	0.0	+	0.0	I		
7	0.0	+	0.0	I		
8	0.0	+	0.0	I		
9	0.0	+	0.0	I		
10	0.0	+	0.0	I		
11	0.0	+	0.0	I		
12	0.2832	+	0.0	I		
13	0.0	+	0.0	I		
14	0.0	+	0.0	I		
15	0.0	+	0.0	I		
16	0.0	+	0.0	I		
17	0.0208	+	0.0006	I	Z =	-0.0125
18	0.0603	+	0.0017	I	Z =	-0.0375
19	0.2158	+	0.0067	I	Z =	-0.0750
20	0.2940	+	0.0111	I	Z =	-0.1250
21	0.3244	+	0.0155	I	Z =	-0.1750
22	0.3272	+	0.0199	I	Z =	-0.2250
23	0.4706	+	0.0380	I	Z =	-0.2875
24	0.4366	+	0.0476	I	Z =	-0.3625
25	0.4030	+	0.0571	I	Z =	-0.4375
26	0.3731	+	0.0664	I	Z =	-0.5125
27	0.3472	+	0.0754	I	Z =	-0.5875
28	0.3246	+	0.0842	I	Z =	-0.6625
29	0.4019	+	0.1254	I	Z =	-0.7500
30	0.3706	+	0.1398	I	Z =	-0.8500
31	0.3422	+	0.1532	I	Z =	-0.9500

32	0.3159	+	0.1657	I	Z =	-1.0500
33	0.2909	+	0.1772	I	Z =	-1.1500
34	0.2668	+	0.1876	I	Z =	-1.2500
35	0.2434	+	0.1968	I	Z =	-1.3500
36	0.2204	+	0.2049	I	Z =	-1.4500
37	0.1979	+	0.2117	I	Z =	-1.5500
38	0.2161	+	0.2722	I	Z =	-1.6625
39	0.1821	+	0.2784	I	Z =	-1.7875
40	0.1488	+	0.2819	I	Z =	-1.9125
41	0.1163	+	0.2830	I	Z =	-2.0375
42	0.0847	+	0.2815	I	Z =	-2.1625
43	0.0543	+	0.2775	I	Z =	-2.2875
44	0.0252	+	0.2711	I	Z =	-2.4125
45	-0.0025	+	0.2625	I	Z =	-2.5375
46	-0.0285	+	0.2516	I	Z =	-2.6625
47	-0.0528	+	0.2388	I	Z =	-2.7875
48	-0.0752	+	0.2242	I	Z =	-2.9125
49	-0.0955	+	0.2079	I	Z =	-3.0375
50	-0.1136	+	0.1902	I	Z =	-3.1625
51	-0.1295	+	0.1712	I	Z =	-3.2875
52	-0.1731	+	0.1791	I	Z =	-3.4250
53	-0.1885	+	0.1491	I	Z =	-3.5750
54	-0.1997	+	0.1185	I	Z =	-3.7250
55	-0.2067	+	0.0875	I	Z =	-3.8750
56	-0.2097	+	0.0568	I	Z =	-4.0250

BLOCK NO 13 RADIUS = 0.8750

1	0.0	+	0.0	I		
2	0.0	+	0.0	I		
3	0.0	+	0.0	I		
4	0.0	+	0.0	I		
5	0.0	+	0.0	I		
6	0.0	+	0.0	I		
7	0.0	+	0.0	I		
8	0.0	+	0.0	I		
9	0.0	+	0.0	I		
10	0.0	+	0.0	I		
11	0.0	+	0.0	I		
12	0.0	+	0.0	I		
13	6.2832	+	0.0	I		
14	0.0	+	0.0	I		
15	0.0	+	0.0	I		
16	0.0	+	0.0	I		
17	0.0433	+	0.0005	I	Z =	-0.0125
18	0.1207	+	0.0016	I	Z =	-0.0375
19	0.3855	+	0.0066	I	Z =	-0.0750
20	0.4486	+	0.0110	I	Z =	-0.1250
21	0.4349	+	0.0153	I	Z =	-0.1750
22	0.4002	+	0.0197	I	Z =	-0.2250
23	0.5346	+	0.0376	I	Z =	-0.2875

24	0.4695	+	0.0471	I	Z =	-0.3625
25	0.4193	+	0.0565	I	Z =	-0.4375
26	0.3804	+	0.0657	I	Z =	-0.5125
27	0.3492	+	0.0747	I	Z =	-0.5875
28	0.3235	+	0.0833	I	Z =	-0.6625
29	0.3977	+	0.1241	I	Z =	-0.7500
30	0.3646	+	0.1383	I	Z =	-0.8500
31	0.3354	+	0.1516	I	Z =	-0.9500
32	0.3088	+	0.1639	I	Z =	-1.0500
33	0.2837	+	0.1753	I	Z =	-1.1500
34	0.2598	+	0.1855	I	Z =	-1.2500
35	0.2367	+	0.1947	I	Z =	-1.3500
36	0.2141	+	0.2026	I	Z =	-1.4500
37	0.1919	+	0.2093	I	Z =	-1.5500
38	0.2092	+	0.2692	I	Z =	-1.6625
39	0.1758	+	0.2752	I	Z =	-1.7875
40	0.1431	+	0.2787	I	Z =	-1.9125
41	0.1112	+	0.2796	I	Z =	-2.0375
42	0.0802	+	0.2781	I	Z =	-2.1625
43	0.0503	+	0.2740	I	Z =	-2.2875
44	0.0217	+	0.2677	I	Z =	-2.4125
45	-0.0055	+	0.2590	I	Z =	-2.5375
46	-0.0311	+	0.2482	I	Z =	-2.6625
47	-0.0550	+	0.2354	I	Z =	-2.7875
48	-0.0769	+	0.2209	I	Z =	-2.9125
49	-0.0969	+	0.2047	I	Z =	-3.0375
50	-0.1147	+	0.1870	I	Z =	-3.1625
51	-0.1302	+	0.1682	I	Z =	-3.2875
52	-0.1735	+	0.1756	I	Z =	-3.4250
53	-0.1885	+	0.1459	I	Z =	-3.5750
54	-0.1994	+	0.1154	I	Z =	-3.7250
55	-0.2061	+	0.0847	I	Z =	-3.8750
56	-0.2089	+	0.0543	I	Z =	-4.0250

BLOCK NO 14 RADIUS = 0.9250

1	0.0	+	0.0	I
2	0.0	+	0.0	I
3	0.0	+	0.0	I
4	0.0	+	0.0	I
5	0.0	+	0.0	I
6	0.0	+	0.0	I
7	0.0	+	0.0	I
8	0.0	+	0.0	I
9	0.0	+	0.0	I
10	0.0	+	0.0	I
11	0.0	+	0.0	I
12	0.0	+	0.0	I
13	0.0	+	0.0	I
14	6.2832	+	0.0	I
15	0.0	+	0.0	I

16	0.0	+	0.C	I		
17	0.1110	+	0.C005	I	Z =	-0.0125
18	0.2772	+	0.C016	I	Z =	-0.0375
19	0.6962	+	0.C065	I	Z =	-0.0750
20	0.6358	+	0.C109	I	Z =	-0.1250
21	0.5344	+	0.C152	I	Z =	-0.1750
22	0.4538	+	0.0195	I	Z =	-0.2250
23	0.5739	+	0.C372	I	Z =	-0.2875
24	0.4859	+	0.0467	I	Z =	-0.3625
25	0.4253	+	0.0560	I	Z =	-0.4375
26	0.3812	+	0.C651	I	Z =	-0.5125
27	0.3472	+	0.0740	I	Z =	-0.5875
28	0.3200	+	0.C826	I	Z =	-0.6625
29	0.3918	+	0.1230	I	Z =	-0.7500
30	0.3581	+	0.1371	I	Z =	-0.8500
31	0.3287	+	0.1502	I	Z =	-0.9500
32	0.3021	+	0.1625	I	Z =	-1.0500
33	0.2773	+	0.1737	I	Z =	-1.1500
34	0.2537	+	0.1838	I	Z =	-1.2500
35	0.2309	+	0.1929	I	Z =	-1.3500
36	0.2086	+	0.2007	I	Z =	-1.4500
37	0.1868	+	0.2073	I	Z =	-1.5500
38	0.2034	+	0.2666	I	Z =	-1.6625
39	0.1705	+	0.2725	I	Z =	-1.7875
40	0.1383	+	0.2759	I	Z =	-1.9125
41	0.1069	+	0.2768	I	Z =	-2.0375
42	0.0764	+	0.2752	I	Z =	-2.1625
43	0.0469	+	0.2711	I	Z =	-2.2875
44	0.0187	+	0.2647	I	Z =	-2.4125
45	-0.0081	+	0.2561	I	Z =	-2.5375
46	-0.0333	+	0.2453	I	Z =	-2.6625
47	-0.0568	+	0.2326	I	Z =	-2.7875
48	-0.0784	+	0.2181	I	Z =	-2.9125
49	-0.0980	+	0.2019	I	Z =	-3.0375
50	-0.1155	+	0.1844	I	Z =	-3.1625
51	-0.1308	+	0.1657	I	Z =	-3.2875
52	-0.1739	+	0.1727	I	Z =	-3.4250
53	-0.1886	+	0.1432	I	Z =	-3.5750
54	-0.1991	+	0.1129	I	Z =	-3.7250
55	-0.2056	+	0.0824	I	Z =	-3.8750
56	-0.2081	+	0.0522	I	Z =	-4.0250

BLOCK NO 15 RADIUS = 0.9625

1	C.0	+	0.C	I
2	C.0	+	0.0	I
3	C.0	+	0.0	I
4	0.0	+	0.0	I
5	C.0	+	0.C	I
6	0.0	+	0.C	I
7	0.0	+	0.C	I

8	0.0	+	0.0	I		
9	0.0	+	0.0	I		
10	0.0	+	0.0	I		
11	0.0	+	0.0	I		
12	0.0	+	0.0	I		
13	0.0	+	0.0	I		
14	0.0	+	0.0	I		
15	6.2832	+	0.0	I		
16	0.0	+	0.0	I		
17	0.3765	+	0.0005	I	Z =	-0.0125
18	0.6713	+	0.0016	I	Z =	-0.0375
19	1.1093	+	0.0065	I	Z =	-0.0750
20	0.7791	+	0.0108	I	Z =	-0.1250
21	0.5911	+	0.0151	I	Z =	-0.17
22	0.4789	+	0.0194	I	Z =	-0.225
23	0.5887	+	0.0370	I	Z =	-0.2875
24	0.4896	+	0.0464	I	Z =	-0.3625
25	0.4245	+	0.0556	I	Z =	-0.4375
26	0.3783	+	0.0647	I	Z =	-0.5125
27	0.3434	+	0.0735	I	Z =	-0.5875
28	0.3157	+	0.0820	I	Z =	-0.6625
29	0.3859	+	0.1222	I	Z =	-0.7500
30	0.3522	+	0.1361	I	Z =	-0.8500
31	0.3230	+	0.1492	I	Z =	-0.9500
32	0.2966	+	0.1613	I	Z =	-1.0500
33	0.2721	+	0.1724	I	Z =	-1.1500
34	0.2488	+	0.1825	I	Z =	-1.2500
35	0.2263	+	0.1915	I	Z =	-1.3500
36	0.2043	+	0.1992	I	Z =	-1.4500
37	0.1828	+	0.2058	I	Z =	-1.5500
38	0.1988	+	0.2646	I	Z =	-1.6625
39	0.1663	+	0.2704	I	Z =	-1.7875
40	0.1345	+	0.2737	I	Z =	-1.9125
41	0.1035	+	0.2746	I	Z =	-2.0375
42	0.0734	+	0.2729	I	Z =	-2.1625
43	0.0443	+	0.2689	I	Z =	-2.2875
44	0.0165	+	0.2625	I	Z =	-2.4125
45	-0.0100	+	0.2538	I	Z =	-2.5375
46	-0.0349	+	0.2431	I	Z =	-2.6625
47	-0.0582	+	0.2304	I	Z =	-2.7875
48	-0.0795	+	0.2159	I	Z =	-2.9125
49	-0.0989	+	0.1998	I	Z =	-3.0375
50	-0.1162	+	0.1823	I	Z =	-3.1625
51	-0.1313	+	0.1637	I	Z =	-3.2875
52	-0.1742	+	0.1705	I	Z =	-3.4250
53	-0.1886	+	0.1410	I	Z =	-3.5750
54	-0.1989	+	0.1109	I	Z =	-3.7250
55	-0.2052	+	0.0806	I	Z =	-3.8750
56	-0.2076	+	0.0505	I	Z =	-4.0250

```
BLOCK NO 16      RADIUS =      0.9875


  1          0.0       +        0.0       I
  2          0.0       +        0.0       I
  3          0.0       +        0.0       I
  4          0.0       +        0.0       I
  5          0.0       +        0.0       I
  6          0.0       +        0.0       I
  7          0.0       +        0.0       I
  8          0.0       +        0.0       I
  9          0.0       +        0.0       I
 10          0.0       +        0.0       I
 11          0.0       +        0.0       I
 12          0.0       +        0.0       I
 13          0.0       +        0.0       I
 14          0.0       +        0.0       I
 15          0.0       +        0.0       I
 16          6.2832    +        0.0       I
INTEGRATION DID NOT CONVERGE - REAL DIFFERENCE =  0.22818E-01
IMAGINARY DIFFERENCE =  0.88476E-08      THETA =  0.0

Z = -0.125CCE-01      BTR =  0.15570E 01      BTI =  0.19616E-04
 17          1.5927    +        0.0005    I        Z =     -0.0125
INTEGRATION DID NOT CONVERGE - REAL DIFFERENCE =  0.23174E-03
IMAGINARY DIFFERENCE =  0.26193E-09      THETA =  0.0

Z = -0.375CCE-01      BTR =  0.11388E 01      BTI =  0.58854E-04
 18          1.2364    +        0.0016    I        Z =     -0.0375
 19          1.3668    +        0.0065    I        Z =     -0.0750
 20          0.8322    +        0.0107    I        Z =     -0.1250
 21          0.6069    +        0.0150    I        Z =     -0.1750
 22          0.4838    +        0.0193    I        Z =     -0.2250
 23          0.5892    +        0.0368    I        Z =     -0.2875
 24          0.4872    +        0.0462    I        Z =     -0.3625
 25          0.4212    +        0.0554    I        Z =     -0.4375
 26          0.3747    +        0.0644    I        Z =     -0.5125
 27          0.3398    +        0.0731    I        Z =     -0.5875
 28          0.3121    +        0.0816    I        Z =     -0.6625
 29          0.3812    +        0.1216    I        Z =     -0.7500
 30          0.3478    +        0.1354    I        Z =     -0.8500
 31          0.3188    +        0.1484    I        Z =     -0.9500
 32          0.2927    +        0.1605    I        Z =     -1.0500
 33          0.2684    +        0.1716    I        Z =     -1.1500
 34          0.2454    +        0.1816    I        Z =     -1.2500
 35          0.2231    +        0.1905    I        Z =     -1.3500
 36          0.2014    +        0.1982    I        Z =     -1.4500
 37          0.1800    +        0.2047    I        Z =     -1.5500
 38          0.1956    +        0.2632    I        Z =     -1.6625
 39          0.1635    +        0.2690    I        Z =     -1.7875
 40          0.1320    +        0.2723    I        Z =     -1.9125
 41          0.1012    +        0.2731    I        Z =     -2.0375
 42          0.0714    +        0.2714    I        Z =     -2.1625
 43          0.0425    +        0.2673    I        Z =     -2.2875
 44          0.0149    +        0.2609    I        Z =     -2.4125
```

45	-0.0114	+	0.2523	I	Z =	-2.5375
46	-0.0361	+	0.2415	I	Z =	-2.6625
47	-0.0591	+	0.2288	I	Z =	-2.7875
48	-0.0803	+	0.2144	I	Z =	-2.9125
49	-0.0995	+	0.1983	I	Z =	-3.0375
50	-0.1166	+	0.1809	I	Z =	-3.1625
51	-0.1315	+	0.1623	I	Z =	-3.2875
52	-0.1744	+	0.1689	I	Z =	-3.4250
53	-0.1886	+	0.1396	I	Z =	-3.5750
54	-0.1988	+	0.1096	I	Z =	-3.7250
55	-0.2050	+	0.0793	I	Z =	-3.8750
56	-0.2072	+	0.0494	I	Z =	-4.0250

BLOCK NO 17 Z DISTANCE = -0.0125

1	0.0680	+	0.0148	I	R =	0.0625
2	0.2068	+	0.0440	I	R =	0.1875
3	0.2713	+	0.0557	I	R =	0.3000
4	0.2711	+	0.0534	I	R =	0.3875
5	0.2163	+	0.0409	I	R =	0.4500
6	0.1198	+	0.0220	I	R =	0.4875
7	0.1281	+	0.0230	I	R =	0.5125
8	0.2834	+	0.0490	I	R =	0.5500
9	0.3243	+	0.0528	I	R =	0.6000
10	0.5818	+	0.0860	I	R =	0.6625
11	0.7408	+	0.0937	I	R =	0.7375
12	1.0078	+	0.1007	I	R =	0.8125
13	0.9593	+	0.0707	I	R =	0.8750
14	1.5250	+	0.0733	I	R =	0.9250

INTEGRATION DID NOT CONVERGE - REAL DIFFERENCE = 0.20790E-03
IMAGINARY DIFFERENCE = 0.32596E-08 THETA = 0.0

Z = 0.96250E 00 BTR = 0.11256E 01 BTI = 0.58717E-04

15	1.3333	+	0.0376	I	R =	0.9625

INTEGRATION DID NOT CONVERGE - REAL DIFFERENCE = 0.22344E-01
IMAGINARY DIFFERENCE = 0.62573E-09 THETA = 0.0

Z = 0.98750E 00 BTR = 0.15709E 01 BTI = 0.21556E-04

16	1.7205	+	0.0381	I	R =	0.9875
17	0.3041	+	0.0384	I	Z =	-0.0125
18	0.1144	+	0.0384	I	Z =	-0.0375
19	0.2179	+	0.0768	I	Z =	-0.0750
20	0.2005	+	0.0767	I	Z =	-0.1250
21	0.1847	+	0.0766	I	Z =	-0.1750
22	0.1714	+	0.0764	I	Z =	-0.2250
23	0.2363	+	0.1143	I	Z =	-0.2875
24	0.2153	+	0.1137	I	Z =	-0.3625
25	0.1973	+	0.1129	I	Z =	-0.4375
26	0.1812	+	0.1121	I	Z =	-0.5125
27	0.1667	+	0.1111	I	Z =	-0.5875
28	0.1534	+	0.1099	I	Z =	-0.6625

29	0.1854	+	0.1446	I	Z =	-0.7500
30	0.1652	+	0.1421	I	Z =	-0.8500
31	0.1465	+	0.1393	I	Z =	-0.9500
32	0.1293	+	0.1362	I	Z =	-1.0500
33	0.1133	+	0.1328	I	Z =	-1.1500
34	0.0985	+	0.1292	I	Z =	-1.2500
35	0.0847	+	0.1254	I	Z =	-1.3500
36	0.0720	+	0.1214	I	Z =	-1.4500
37	0.0602	+	0.1172	I	Z =	-1.5500
38	0.0599	+	0.1402	I	Z =	-1.6625
39	0.0445	+	0.1330	I	Z =	-1.7875
40	0.0306	+	0.1256	I	Z =	-1.9125
41	0.0182	+	0.1179	I	Z =	-2.0375
42	0.0071	+	0.1101	I	Z =	-2.1625
43	-0.0027	+	0.1022	I	Z =	-2.2875
44	-0.0113	+	0.0942	I	Z =	-2.4125
45	-0.0187	+	0.0862	I	Z =	-2.5375
46	-0.0251	+	0.0783	I	Z =	-2.6625
47	-0.0304	+	0.0704	I	Z =	-2.7875
48	-0.0348	+	0.0626	I	Z =	-2.9125
49	-0.0383	+	0.0551	I	Z =	-3.0375
50	-0.0410	+	0.0477	I	Z =	-3.1625
51	-0.0430	+	0.0406	I	Z =	-3.2875
52	-0.0531	+	0.0397	I	Z =	-3.4250
53	-0.0537	+	0.0304	I	Z =	-3.5750
54	-0.0534	+	0.0217	I	Z =	-3.7250
55	-0.0521	+	0.0136	I	Z =	-3.8750
56	-0.0500	+	0.0063	I	Z =	-4.0250

BLOCK NO 18 Z DISTANCE = -0.0375

1	0.0679	+	0.0148	I	R =	0.0625
2	0.2064	+	0.0440	I	R =	0.1875
3	0.2708	+	0.0557	I	R =	0.3000
4	0.2704	+	0.0533	I	R =	0.3875
5	0.2156	+	0.0409	I	R =	0.4500
6	0.1194	+	0.0220	I	R =	0.4875
7	0.1276	+	0.0230	I	R =	0.5125
8	0.2821	+	0.0490	I	R =	0.5500
9	0.3225	+	0.0528	I	R =	0.6000
10	0.5772	+	0.0860	I	R =	0.6625
11	0.7308	+	0.0936	I	R =	0.7375
12	0.9796	+	0.1007	I	R =	0.8125
13	0.8985	+	0.0707	I	R =	0.8750
14	1.2591	+	0.0733	I	R =	0.9250
15	0.7657	+	0.0376	I	R =	0.9625
16	0.4949	+	0.0381	I	R =	0.9875
17	0.1144	+	0.0384	I	Z =	-0.0125
18	0.3041	+	0.0384	I	Z =	-0.0375
19	0.2255	+	0.0768	I	Z =	-0.0750
20	0.2092	+	0.0767	I	Z =	-0.1250
21	0.1922	+	0.0766	I	Z =	-0.1750

22	0.1777	+	0.0765	I	Z =	-0.2250
23	0.2442	+	0.1144	I	Z =	-0.2875
24	0.2219	+	0.1139	I	Z =	-0.3625
25	0.2030	+	0.1132	I	Z =	-0.4375
26	0.1864	+	0.1124	I	Z =	-0.5125
27	0.1714	+	0.1114	I	Z =	-0.5875
28	0.1577	+	0.1103	I	Z =	-0.6625
29	0.1907	+	0.1452	I	Z =	-0.7500
30	0.1701	+	0.1427	I	Z =	-0.8500
31	0.1511	+	0.1400	I	Z =	-0.9500
32	0.1335	+	0.1370	I	Z =	-1.0500
33	0.1172	+	0.1337	I	Z =	-1.1500
34	0.1021	+	0.1302	I	Z =	-1.2500
35	0.0881	+	0.1264	I	Z =	-1.3500
36	0.0751	+	0.1224	I	Z =	-1.4500
37	0.0630	+	0.1182	I	Z =	-1.5500
38	0.0632	+	0.1416	I	Z =	-1.6625
39	0.0475	+	0.1345	I	Z =	-1.7875
40	0.0333	+	0.1271	I	Z =	-1.9125
41	0.0206	+	0.1195	I	Z =	-2.0375
42	0.0092	+	0.1117	I	Z =	-2.1625
43	-0.0008	+	0.1038	I	Z =	-2.2875
44	-0.0096	+	0.0958	I	Z =	-2.4125
45	-0.0173	+	0.0878	I	Z =	-2.5375
46	-0.0239	+	0.0799	I	Z =	-2.6625
47	-0.0294	+	0.0720	I	Z =	-2.7875
48	-0.0340	+	0.0642	I	Z =	-2.9125
49	-0.0377	+	0.0566	I	Z =	-3.0375
50	-0.0406	+	0.0491	I	Z =	-3.1625
51	-0.0426	+	0.0420	I	Z =	-3.2875
52	-0.0529	+	0.0413	I	Z =	-3.4250
53	-0.0537	+	0.0319	I	Z =	-3.5750
54	-0.0535	+	0.0231	I	Z =	-3.7250
55	-0.0524	+	0.0149	I	Z =	-3.8750
56	-0.0504	+	0.0075	I	Z =	-4.0250

BLOCK NO 19 Z DISTANCE = -0.0750

1	0.0675	+	0.0148	I	R =	0.0625
2	0.2052	+	0.0440	I	R =	0.1875
3	0.2688	+	0.0557	I	R =	0.3000
4	0.2680	+	0.0533	I	R =	0.3875
5	0.2134	+	0.0409	I	R =	0.4500
6	0.1180	+	0.0220	I	R =	0.4875
7	0.1260	+	0.0230	I	R =	0.5125
8	0.2780	+	0.0489	I	R =	0.5500
9	0.3167	+	0.0528	I	R =	0.6000
10	0.5624	+	0.0859	I	R =	0.6625
11	0.6996	+	0.0936	I	R =	0.7375
12	0.8980	+	0.1006	I	R =	0.8125
13	0.7494	+	0.0707	I	R =	0.8750

14	0.8434	+	0.0733	I	R =	0.9250
15	0.3695	+	0.0375	I	R =	0.9625
16	0.2182	+	0.0381	I	R =	0.9875
17	0.1090	+	0.0384	I	Z =	-0.0125
18	0.1129	+	0.0384	I	Z =	-0.0375
19	0.4191	+	0.0768	I	Z =	-0.0750
20	0.2219	+	0.0768	I	Z =	-0.1250
21	0.2048	+	0.0767	I	Z =	-0.1750
22	0.1884	+	0.0766	I	Z =	-0.2250
23	0.2572	+	0.1146	I	Z =	-0.2875
24	0.2326	+	0.1142	I	Z =	-0.3625
25	0.2121	+	0.1136	I	Z =	-0.4375
26	0.1945	+	0.1128	I	Z =	-0.5125
27	0.1787	+	0.1119	I	Z =	-0.5875
28	0.1644	+	0.1109	I	Z =	-0.6625
29	0.1989	+	0.1461	I	Z =	-0.7500
30	0.1776	+	0.1437	I	Z =	-0.8500
31	0.1580	+	0.1411	I	Z =	-0.9500
32	0.1399	+	0.1381	I	Z =	-1.0500
33	0.1232	+	0.1350	I	Z =	-1.1500
34	0.1076	+	0.1315	I	Z =	-1.2500
35	0.0932	+	0.1278	I	Z =	-1.3500
36	0.0798	+	0.1239	I	Z =	-1.4500
37	0.0674	+	0.1198	I	Z =	-1.5500
38	0.0683	+	0.1437	I	Z =	-1.6625
39	0.0520	+	0.1367	I	Z =	-1.7875
40	0.0374	+	0.1293	I	Z =	-1.9125
41	0.0242	+	0.1218	I	Z =	-2.0375
42	0.0125	+	0.1141	I	Z =	-2.1625
43	0.0021	+	0.1062	I	Z =	-2.2875
44	-0.0071	+	0.0982	I	Z =	-2.4125
45	-0.0151	+	0.0902	I	Z =	-2.5375
46	-0.0220	+	0.0822	I	Z =	-2.6625
47	-0.0279	+	0.0743	I	Z =	-2.7875
48	-0.0327	+	0.0665	I	Z =	-2.9125
49	-0.0367	+	0.0588	I	Z =	-3.0375
50	-0.0398	+	0.0513	I	Z =	-3.1625
51	-0.0421	+	0.0441	I	Z =	-3.2875
52	-0.0525	+	0.0437	I	Z =	-3.4250
53	-0.0536	+	0.0342	I	Z =	-3.5750
54	-0.0536	+	0.0252	I	Z =	-3.7250
55	-0.0527	+	0.0169	I	Z =	-3.8750
56	-0.0510	+	0.0093	I	Z =	-4.0250

BLOCK NO 2C Z DISTANCE = -0.1250

1	0.0667	+	0.0147	I	R =	0.0625
2	0.2022	+	0.0439	I	R =	0.1875
3	0.2643	+	0.0556	I	R =	0.3000
4	0.2627	+	0.0533	I	R =	0.3875
5	0.2084	+	0.0408	I	R =	0.4500

6	0.1149	+	0.0220	I	R	=	0.4875
7	0.1224	+	0.0230	I	R	=	0.5125
8	0.2688	+	0.0489	I	R	=	0.5500
9	0.3038	+	0.0527	I	R	=	0.6000
10	0.5309	+	0.0859	I	R	=	0.6625
11	0.6381	+	0.0935	I	R	=	0.7375
12	0.7606	+	0.1005	I	R	=	0.8125
13	0.5598	+	0.0706	I	R	=	0.8750
14	0.5298	+	0.0732	I	R	=	0.9250
15	0.2076	+	0.0375	I	R	=	0.9625
16	0.1396	+	0.0381	I	R	=	0.9875
17	0.1002	+	0.0383	I	Z	=	-0.0125
18	0.1046	+	0.0384	I	Z	=	-0.0375
19	0.2219	+	0.0768	I	Z	=	-0.0750
20	0.4191	+	0.0768	I	Z	=	-0.1250
21	0.2219	+	0.0768	I	Z	=	-0.1750
22	0.2048	+	0.0767	I	Z	=	-0.2250
23	0.2772	+	0.1149	I	Z	=	-0.2875
24	0.2484	+	0.1145	I	Z	=	-0.3625
25	0.2254	+	0.1140	I	Z	=	-0.4375
26	0.2060	+	0.1133	I	Z	=	-0.5125
27	0.1890	+	0.1125	I	Z	=	-0.5875
28	0.1738	+	0.1116	I	Z	=	-0.6625
29	0.2103	+	0.1471	I	Z	=	-0.7500
30	0.1880	+	0.1449	I	Z	=	-0.8500
31	0.1676	+	0.1424	I	Z	=	-0.9500
32	0.1488	+	0.1396	I	Z	=	-1.0500
33	0.1314	+	0.1366	I	Z	=	-1.1500
34	0.1153	+	0.1333	I	Z	=	-1.2500
35	0.1003	+	0.1297	I	Z	=	-1.3500
36	0.0864	+	0.1259	I	Z	=	-1.4500
37	0.0735	+	0.1219	I	Z	=	-1.5500
38	0.0752	+	0.1464	I	Z	=	-1.6625
39	0.0583	+	0.1395	I	Z	=	-1.7875
40	0.0430	+	0.1323	I	Z	=	-1.9125
41	0.0293	+	0.1248	I	Z	=	-2.0375
42	0.0170	+	0.1172	I	Z	=	-2.1625
43	0.0061	+	0.1093	I	Z	=	-2.2875
44	-0.0036	+	0.1014	I	Z	=	-2.4125
45	-0.0120	+	0.0934	I	Z	=	-2.5375
46	-0.0194	+	0.0854	I	Z	=	-2.6625
47	-0.0256	+	0.0775	I	Z	=	-2.7875
48	-0.0309	+	0.0696	I	Z	=	-2.9125
49	-0.0352	+	0.0619	I	Z	=	-3.0375
50	-0.0387	+	0.0543	I	Z	=	-3.1625
51	-0.0413	+	0.0470	I	Z	=	-3.2875
52	-0.0519	+	0.0470	I	Z	=	-3.4250
53	-0.0534	+	0.0373	I	Z	=	-3.5750
54	-0.0537	+	0.0281	I	Z	=	-3.7250
55	-0.0531	+	0.0196	I	Z	=	-3.8750
56	-0.0516	+	0.0117	I	Z	=	-4.0250

BLOCK NO 21 Z DISTANCE = -0.1750

1	0.0654	+	0.0147	I	R =	0.0625
2	0.1980	+	0.0439	I	R =	0.1875
3	0.2579	+	0.0556	I	R =	0.3000
4	0.2551	+	0.0532	I	R =	0.3875
5	0.2014	+	0.0407	I	R =	0.4500
6	0.1106	+	0.0219	I	R =	0.4875
7	0.1175	+	0.0229	I	R =	0.5125
8	0.2564	+	0.0488	I	R =	0.5500
9	0.2868	+	0.0526	I	R =	0.6000
10	0.4915	+	0.0857	I	R =	0.6625
11	0.5685	+	0.0934	I	R =	0.7375
12	0.6330	+	0.1004	I	R =	0.8125
13	0.4275	+	0.0705	I	R =	0.8750
14	0.3782	+	0.0731	I	R =	0.9250
15	0.1491	+	0.0374	I	R =	0.9625
16	0.1119	+	0.0380	I	R =	0.9875
17	0.0923	+	0.0383	I	Z =	-0.0125
18	0.0961	+	0.0383	I	Z =	-0.0375
19	0.2048	+	0.0767	I	Z =	-0.0750
20	0.2219	+	0.0768	I	Z =	-0.1250
21	0.4191	+	0.0768	I	Z =	-0.1750
22	0.2219	+	0.0768	I	Z =	-0.2250
23	0.3009	+	0.1150	I	Z =	-0.2875
24	0.2668	+	0.1148	I	Z =	-0.3625
25	0.2402	+	0.1143	I	Z =	-0.4375
26	0.2186	+	0.1138	I	Z =	-0.5125
27	0.2001	+	0.1131	I	Z =	-0.5875
28	0.1838	+	0.1122	I	Z =	-0.6625
29	0.2224	+	0.1481	I	Z =	-0.7500
30	0.1989	+	0.1461	I	Z =	-0.8500
31	0.1776	+	0.1437	I	Z =	-0.9500
32	0.1580	+	0.1411	I	Z =	-1.0500
33	0.1399	+	0.1381	I	Z =	-1.1500
34	0.1232	+	0.1350	I	Z =	-1.2500
35	0.1076	+	0.1315	I	Z =	-1.3500
36	0.0932	+	0.1278	I	Z =	-1.4500
37	0.0798	+	0.1239	I	Z =	-1.5500
38	0.0825	+	0.1491	I	Z =	-1.6625
39	0.0649	+	0.1423	I	Z =	-1.7875
40	0.0490	+	0.1352	I	Z =	-1.9125
41	0.0346	+	0.1279	I	Z =	-2.0375
42	0.0218	+	0.1203	I	Z =	-2.1625
43	0.0103	+	0.1125	I	Z =	-2.2875
44	0.0001	+	0.1046	I	Z =	-2.4125
45	-0.0088	+	0.0966	I	Z =	-2.5375
46	-0.0166	+	0.0886	I	Z =	-2.6625
47	-0.0233	+	0.0807	I	Z =	-2.7875
48	-0.0289	+	0.0727	I	Z =	-2.9125
49	-0.0336	+	0.0649	I	Z =	-3.0375
50	-0.0374	+	0.0573	I	Z =	-3.1625

51	-0.0403	+	0.0499	I	Z =	-3.2875
52	-0.0512	+	0.0504	I	Z =	-3.4250
53	-0.0530	+	0.0405	I	Z =	-3.5750
54	-0.0537	+	0.0311	I	Z =	-3.7250
55	-0.0534	+	0.0224	I	Z =	-3.8750
56	-0.0522	+	0.0143	I	Z =	-4.0250

BLOCK NU 22 Z DISTANCE = -0.2250

1	0.0637	+	0.0147	I	R =	0.0625
2	0.1926	+	0.0438	I	R =	0.1875
3	0.2498	+	0.0554	I	R =	0.3000
4	0.2457	+	0.0531	I	R =	0.3875
5	0.1929	+	0.0407	I	R =	0.4500
6	0.1054	+	0.0219	I	R =	0.4875
7	0.1116	+	0.0229	I	R =	0.5125
8	0.2419	+	0.0487	I	R =	0.5500
9	0.2675	+	0.0525	I	R =	0.6000
10	0.4495	+	0.0855	I	R =	0.6625
11	0.5018	+	0.0932	I	R =	0.7375
12	0.5306	+	0.1001	I	R =	0.8125
13	0.3411	+	0.0703	I	R =	0.8750
14	0.2963	+	0.0729	I	R =	0.9250
15	0.1204	+	0.0374	I	R =	0.9625
16	0.0971	+	0.0379	I	R =	0.9875
17	0.0857	+	0.0382	I	Z =	-0.0125
18	0.0888	+	0.0383	I	Z =	-0.0375
19	0.1884	+	0.0766	I	Z =	-0.0750
20	0.2048	+	0.0767	I	Z =	-0.1250
21	0.2219	+	0.0768	I	Z =	-0.1750
22	0.4191	+	0.0768	I	Z =	-0.2250
23	0.3265	+	0.1152	I	Z =	-0.2875
24	0.2886	+	0.1150	I	Z =	-0.3625
25	0.2572	+	0.1146	I	Z =	-0.4375
26	0.2326	+	0.1142	I	Z =	-0.5125
27	0.2121	+	0.1136	I	Z =	-0.5875
28	0.1945	+	0.1128	I	Z =	-0.6625
29	0.2351	+	0.1490	I	Z =	-0.7500
30	0.2103	+	0.1471	I	Z =	-0.8500
31	0.1880	+	0.1449	I	Z =	-0.9500
32	0.1676	+	0.1424	I	Z =	-1.0500
33	0.1488	+	0.1396	I	Z =	-1.1500
34	0.1314	+	0.1366	I	Z =	-1.2500
35	0.1153	+	0.1333	I	Z =	-1.3500
36	0.1003	+	0.1297	I	Z =	-1.4500
37	0.0864	+	0.1259	I	Z =	-1.5500
38	0.0900	+	0.1517	I	Z =	-1.6625
39	0.0717	+	0.1451	I	Z =	-1.7875
40	0.0551	+	0.1381	I	Z =	-1.9125
41	0.0402	+	0.1308	I	Z =	-2.0375
42	0.0267	+	0.1233	I	Z =	-2.1625

43	0.0147	+	0.1156	I	Z =	-2.2875
44	0.0040	+	0.1078	I	Z =	-2.4125
45	-0.0054	+	0.0998	I	Z =	-2.5375
46	-0.0136	+	0.0918	I	Z =	-2.6625
47	-0.0207	+	0.0838	I	Z =	-2.7875
48	-0.0268	+	0.0759	I	Z =	-2.9125
49	-0.0318	+	0.0681	I	Z =	-3.0375
50	-0.0360	+	0.0603	I	Z =	-3.1625
51	-0.0392	+	0.0528	I	Z =	-3.2875
52	-0.0503	+	0.0538	I	Z =	-3.4250
53	-0.0525	+	0.0437	I	Z =	-3.5750
54	-0.0536	+	0.0342	I	Z =	-3.7250
55	-0.0536	+	0.0252	I	Z =	-3.8750
56	-0.0527	+	0.0169	I	Z =	-4.0250

BLOCK NO 23 7 DISTANCE = -0.2875

1	0.0612	+	0.0146	I	R =	0.0625
2	0.1845	+	0.0436	I	R =	0.1875
3	0.2379	+	0.0553	I	R =	0.3000
4	0.2322	+	0.0529	I	R =	0.3875
5	0.1808	+	0.0405	I	R =	0.4500
6	0.0982	+	0.0218	I	R =	0.4875
7	0.1035	+	0.0228	I	R =	0.5125
8	0.2225	+	0.0485	I	R =	0.5500
9	0.2427	+	0.0523	I	R =	0.6000
10	0.3987	+	0.0852	I	R =	0.6625
11	0.4295	+	0.0928	I	R =	0.7375
12	0.4352	+	0.0998	I	R =	0.8125
13	0.2718	+	0.0701	I	R =	0.8750
14	0.2370	+	0.0727	I	R =	0.9250
15	0.1000	+	0.0372	I	R =	0.9625
16	0.0854	+	0.0378	I	R =	0.9875
17	0.0787	+	0.0381	I	Z =	-0.0125
18	0.0813	+	0.0381	I	Z =	-0.0375
19	0.1714	+	0.0764	I	Z =	-0.0750
20	0.1847	+	0.0766	I	Z =	-0.1250
21	0.2005	+	0.0767	I	Z =	-0.1750
22	0.2179	+	0.0768	I	Z =	-0.2250
23	0.5329	+	0.1152	I	Z =	-0.2875
24	0.3203	+	0.1151	I	Z =	-0.3625
25	0.2828	+	0.1149	I	Z =	-0.4375
26	0.2527	+	0.1146	I	Z =	-0.5125
27	0.2289	+	0.1141	I	Z =	-0.5875
28	0.2090	+	0.1134	I	Z =	-0.6625
29	0.2521	+	0.1500	I	Z =	-0.7500
30	0.2255	+	0.1483	I	Z =	-0.8500
31	0.2017	+	0.1463	I	Z =	-0.9500
32	0.1801	+	0.1440	I	Z =	-1.0500
33	0.1604	+	0.1414	I	Z =	-1.1500

34	0.1421	+	0.1385	I	Z =	-1.2500
35	0.1252	+	0.1354	I	Z =	-1.3500
36	0.1095	+	0.1320	I	Z =	-1.4500
37	0.0950	+	0.1283	I	Z =	-1.5500
38	0.0998	+	0.1549	I	Z =	-1.6625
39	0.0806	+	0.1484	I	Z =	-1.7875
40	0.0632	+	0.1416	I	Z =	-1.9125
41	0.0475	+	0.1345	I	Z =	-2.0375
42	0.0333	+	0.1271	I	Z =	-2.1625
43	0.0206	+	0.1195	I	Z =	-2.2875
44	0.0092	+	0.1117	I	Z =	-2.4125
45	-0.0008	+	0.1038	I	Z =	-2.5375
46	-0.0096	+	0.0958	I	Z =	-2.6625
47	-0.0173	+	0.0878	I	Z =	-2.7875
48	-0.0239	+	0.0799	I	Z =	-2.9125
49	-0.0294	+	0.0720	I	Z =	-3.0375
50	-0.0340	+	0.0642	I	Z =	-3.1625
51	-0.0377	+	0.0566	I	Z =	-3.2875
52	-0.0490	+	0.0581	I	Z =	-3.4250
53	-0.0517	+	0.0478	I	Z =	-3.5750
54	-0.0533	+	0.0381	I	Z =	-3.7250
55	-0.0537	+	0.0289	I	Z =	-3.8750
56	-0.0532	+	0.0203	I	Z =	-4.0250

BLOCK NO 24 Z DISTANCE = -0.3625

1	0.0577	+	0.0146	I	R =	0.0625
2	0.1733	+	0.0434	I	R =	0.1875
3	0.2218	+	0.0550	I	R =	0.3000
4	0.2144	+	0.0526	I	R =	0.3875
5	0.1654	+	0.0403	I	R =	0.4500
6	0.0893	+	0.0217	I	R =	0.4875
7	0.0935	+	0.0227	I	R =	0.5125
8	0.1993	+	0.0483	I	R =	0.5500
9	0.2143	+	0.0521	I	R =	0.6000
10	0.3445	+	0.0848	I	R =	0.6625
11	0.3604	+	0.0924	I	R =	0.7375
12	0.3553	+	0.0993	I	R =	0.8125
13	0.2196	+	0.0697	I	R =	0.8750
14	0.1945	+	0.0723	I	R =	0.9250
15	0.0850	+	0.0370	I	R =	0.9625
16	0.0757	+	0.0376	I	R =	0.9875
17	0.0717	+	0.0379	I	Z =	-0.0125
18	0.0739	+	0.0380	I	Z =	-0.0375
19	0.1550	+	0.0761	I	Z =	-0.0750
20	0.1655	+	0.0763	I	Z =	-0.1250
21	0.1777	+	0.0765	I	Z =	-0.1750
22	0.1922	+	0.0766	I	Z =	-0.2250
23	0.3203	+	0.1151	I	Z =	-0.2875
24	0.5329	+	0.1152	I	Z =	-0.3625
25	0.3203	+	0.1151	I	Z =	-0.4375

26	0.2828	+	0.1149	I	Z =	-0.5125
27	0.2527	+	0.1146	I	Z =	-0.5875
28	0.2289	+	0.1141	I	Z =	-0.6625
29	0.2748	+	0.1511	I	Z =	-0.7500
30	0.2451	+	0.1496	I	Z =	-0.8500
31	0.2193	+	0.1479	I	Z =	-0.9500
32	0.1961	+	0.1458	I	Z =	-1.0500
33	0.1750	+	0.1434	I	Z =	-1.1500
34	0.1557	+	0.1407	I	Z =	-1.2500
35	0.1378	+	0.1378	I	Z =	-1.3500
36	0.1212	+	0.1345	I	Z =	-1.4500
37	0.1058	+	0.1311	I	Z =	-1.5500
38	0.1122	+	0.1586	I	Z =	-1.6625
39	0.0919	+	0.1524	I	Z =	-1.7875
40	0.0735	+	0.1458	I	Z =	-1.9125
41	0.0567	+	0.1388	I	Z =	-2.0375
42	0.0416	+	0.1316	I	Z =	-2.1625
43	0.0280	+	0.1241	I	Z =	-2.2875
44	0.0159	+	0.1164	I	Z =	-2.4125
45	0.0051	+	0.1086	I	Z =	-2.5375
46	-0.0045	+	0.1006	I	Z =	-2.6625
47	-0.0128	+	0.0926	I	Z =	-2.7875
48	-0.0200	+	0.0846	I	Z =	-2.9125
49	-0.0262	+	0.0767	I	Z =	-3.0375
50	-0.0314	+	0.0688	I	Z =	-3.1625
51	-0.0356	+	0.0611	I	Z =	-3.2875
52	-0.0471	+	0.0634	I	Z =	-3.4250
53	-0.0505	+	0.0529	I	Z =	-3.5750
54	-0.0527	+	0.0429	I	Z =	-3.7250
55	-0.0536	+	0.0334	I	Z =	-3.8750
56	-0.0536	+	0.0245	I	Z =	-4.0250

BLOCK NO 25 Z DISTANCE = -0.4375

1	0.0539	+	0.0145	I	R =	0.0625
2	0.1612	+	0.0431	I	R =	0.1875
3	0.2047	+	0.0546	I	R =	0.3000
4	0.1962	+	0.0523	I	R =	0.3875
5	0.1501	+	0.0401	I	R =	0.4500
6	0.0805	+	0.0216	I	R =	0.4875
7	0.0840	+	0.0225	I	R =	0.5125
8	0.1776	+	0.0480	I	R =	0.5500
9	0.1889	+	0.0517	I	R =	0.6000
10	0.2990	+	0.0843	I	R =	0.6625
11	0.3072	+	0.0918	I	R =	0.7375
12	0.2990	+	0.0986	I	R =	0.8125
13	0.1851	+	0.0693	I	R =	0.8750
14	0.1666	+	0.0718	I	R =	0.9250
15	0.0747	+	0.0368	I	R =	0.9625
16	0.0683	+	0.0373	I	R =	0.9875
17	0.0657	+	0.0376	I	Z =	-0.0125

18	0.0676	+	0.0377	I	Z =	-0.0375
19	0.1414	+	0.0757	I	Z =	-0.0750
20	0.1502	+	0.0760	I	Z =	-0.1250
21	0.1601	+	0.0762	I	Z =	-0.1750
22	0.1714	+	0.0764	I	Z =	-0.2250
23	0.2828	+	0.1149	I	Z =	-0.2875
24	0.3203	+	0.1151	I	Z =	-0.3625
25	0.5329	+	0.1152	I	Z =	-0.4375
26	0.3203	+	0.1151	I	Z =	-0.5125
27	0.2828	+	0.1149	I	Z =	-0.5875
28	0.2527	+	0.1146	I	Z =	-0.6625
29	0.3007	+	0.1520	I	Z =	-0.7500
30	0.2669	+	0.1507	I	Z =	-0.8500
31	0.2384	+	0.1492	I	Z =	-0.9500
32	0.2133	+	0.1474	I	Z =	-1.0500
33	0.1907	+	0.1452	I	Z =	-1.1500
34	0.1701	+	0.1427	I	Z =	-1.2500
35	0.1511	+	0.1400	I	Z =	-1.3500
36	0.1335	+	0.1370	I	Z =	-1.4500
37	0.1172	+	0.1337	I	Z =	-1.5500
38	0.1254	+	0.1621	I	Z =	-1.6625
39	0.1039	+	0.1561	I	Z =	-1.7875
40	0.0843	+	0.1498	I	Z =	-1.9125
41	0.0666	+	0.1430	I	Z =	-2.0375
42	0.0505	+	0.1359	I	Z =	-2.1625
43	0.0360	+	0.1286	I	Z =	-2.2875
44	0.0230	+	0.1210	I	Z =	-2.4125
45	0.0114	+	0.1133	I	Z =	-2.5375
46	0.0011	+	0.1054	I	Z =	-2.6625
47	-0.0080	+	0.0974	I	Z =	-2.7875
48	-0.0158	+	0.0894	I	Z =	-2.9125
49	-0.0226	+	0.0814	I	Z =	-3.0375
50	-0.0284	+	0.0735	I	Z =	-3.1625
51	-0.0332	+	0.0657	I	Z =	-3.2875
52	-0.0448	+	0.0688	I	Z =	-3.4250
53	-0.0490	+	0.0581	I	Z =	-3.5750
54	-0.0517	+	0.0478	I	Z =	-3.7250
55	-0.0533	+	0.0381	I	Z =	-3.8750
56	-0.0537	+	0.0289	I	Z =	-4.0250

BLOCK NO 26 Z DISTANCE = -0.5125

1	0.0499	+	0.0144	I	R =	0.0625
2	0.1487	+	0.0428	I	R =	0.1875
3	0.1876	+	0.0542	I	R =	0.3000
4	0.1783	+	0.0519	I	R =	0.3875
5	0.1354	+	0.0398	I	R =	0.4500
6	0.0723	+	0.0214	I	R =	0.4875
7	0.0751	+	0.0224	I	R =	0.5125
8	0.1580	+	0.0476	I	R =	0.5500
9	0.1667	+	0.0513	I	R =	0.6000

10	0.2613	+	0.0836	I	R =	0.6625
11	0.2656	+	0.0911	I	R =	0.7375
12	0.2574	+	0.0979	I	R =	0.8125
13	0.1602	+	0.0687	I	R =	0.8750
14	0.1463	+	0.0712	I	R =	0.9250
15	0.0668	+	0.0365	I	R =	0.9625
16	0.0621	+	0.0370	I	R =	0.9875
17	0.0604	+	0.0374	I	Z =	-0.0125
18	0.0621	+	0.0375	I	Z =	-0.0375
19	0.1296	+	0.0752	I	Z =	-0.0750
20	0.1373	+	0.0755	I	Z =	-0.1250
21	0.1457	+	0.0758	I	Z =	-0.1750
22	0.1550	+	0.0761	I	Z =	-0.2250
23	0.2527	+	0.1146	I	Z =	-0.2875
24	0.2828	+	0.1149	I	Z =	-0.3625
25	0.3203	+	0.1151	I	Z =	-0.4375
26	0.5329	+	0.1152	I	Z =	-0.5125
27	0.3203	+	0.1151	I	Z =	-0.5875
28	0.2828	+	0.1149	I	Z =	-0.6625
29	0.3315	+	0.1526	I	Z =	-0.7500
30	0.2916	+	0.1517	I	Z =	-0.8500
31	0.2594	+	0.1504	I	Z =	-0.9500
32	0.2318	+	0.1488	I	Z =	-1.0500
33	0.2074	+	0.1469	I	Z =	-1.1500
34	0.1854	+	0.1446	I	Z =	-1.2500
35	0.1652	+	0.1421	I	Z =	-1.3500
36	0.1465	+	0.1393	I	Z =	-1.4500
37	0.1293	+	0.1362	I	Z =	-1.5500
38	0.1393	+	0.1655	I	Z =	-1.6625
39	0.1166	+	0.1598	I	Z =	-1.7875
40	0.0958	+	0.1536	I	Z =	-1.9125
41	0.0770	+	0.1471	I	Z =	-2.0375
42	0.0599	+	0.1402	I	Z =	-2.1625
43	0.0445	+	0.1330	I	Z =	-2.2875
44	0.0306	+	0.1256	I	Z =	-2.4125
45	0.0182	+	0.1179	I	Z =	-2.5375
46	0.0071	+	0.1101	I	Z =	-2.6625
47	-0.0027	+	0.1022	I	Z =	-2.7875
48	-0.0113	+	0.0942	I	Z =	-2.9125
49	-0.0187	+	0.0862	I	Z =	-3.0375
50	-0.0251	+	0.0783	I	Z =	-3.1625
51	-0.0304	+	0.0704	I	Z =	-3.2875
52	-0.0422	+	0.0743	I	Z =	-3.4250
53	-0.0471	+	0.0634	I	Z =	-3.5750
54	-0.0505	+	0.0529	I	Z =	-3.7250
55	-0.0527	+	0.0429	I	Z =	-3.8750
56	-0.0536	+	0.0334	I	Z =	-4.0250

BLOCK NO 27 7 DISTANCE = -0.5875

1	0.0459	+	0.0142	I	R =	0.0625

2	0.1362	+	0.0425	I	R =	0.1875
3	0.1709	+	0.0538	I	R =	0.3000
4	0.1614	+	0.0515	I	R =	0.3875
5	0.1219	+	0.0394	I	R =	0.4500
6	0.0648	+	0.0212	I	R =	0.4875
7	0.0672	+	0.0222	I	R =	0.5125
8	0.1407	+	0.0472	I	R =	0.5500
9	0.1476	+	0.0509	I	R =	0.6000
10	0.2298	+	0.0829	I	R =	0.6625
11	0.2324	+	0.0903	I	R =	0.7375
12	0.2252	+	0.0970	I	R =	0.8125
13	0.1410	+	0.0681	I	R =	0.8750
14	0.1303	+	0.0706	I	R =	0.9250
15	0.0603	+	0.0362	I	R =	0.9625
16	0.0567	+	0.0367	I	R =	0.9875
17	0.0556	+	0.0370	I	Z =	-0.0125
18	0.0571	+	0.0371	I	Z =	-0.0375
19	0.1191	+	0.0746	I	Z =	-0.0750
20	0.1260	+	0.0750	I	Z =	-0.1250
21	0.1334	+	0.0754	I	Z =	-0.1750
22	0.1414	+	0.0757	I	Z =	-0.2250
23	0.2289	+	0.1141	I	Z =	-0.2875
24	0.2527	+	0.1146	I	Z =	-0.3625
25	0.2828	+	0.1149	I	Z =	-0.4375
26	0.3203	+	0.1151	I	Z =	-0.5125
27	0.5329	+	0.1152	I	Z =	-0.5875
28	0.3203	+	0.1151	I	Z =	-0.6625
29	0.3700	+	0.1532	I	Z =	-0.7500
30	0.3205	+	0.1524	I	Z =	-0.8500
31	0.2830	+	0.1514	I	Z =	-0.9500
32	0.2521	+	0.1500	I	Z =	-1.0500
33	0.2255	+	0.1483	I	Z =	-1.1500
34	0.2017	+	0.1463	I	Z =	-1.2500
35	0.1801	+	0.1440	I	Z =	-1.3500
36	0.1604	+	0.1414	I	Z =	-1.4500
37	0.1421	+	0.1385	I	Z =	-1.5500
38	0.1540	+	0.1687	I	Z =	-1.6625
39	0.1299	+	0.1633	I	Z =	-1.7875
40	0.1080	+	0.1574	I	Z =	-1.9125
41	0.0881	+	0.1511	I	Z =	-2.0375
42	0.0700	+	0.1444	I	Z =	-2.1625
43	0.0536	+	0.1374	I	Z =	-2.2875
44	0.0388	+	0.1301	I	Z =	-2.4125
45	0.0255	+	0.1226	I	Z =	-2.5375
46	0.0136	+	0.1148	I	Z =	-2.6625
47	0.0030	+	0.1070	I	Z =	-2.7875
48	-0.0062	+	0.0990	I	Z =	-2.9125
49	-0.0144	+	0.0910	I	Z =	-3.0375
50	-0.0214	+	0.0830	I	Z =	-3.1625
51	-0.0273	+	0.0751	I	Z =	-3.2875
52	-0.0393	+	0.0798	I	Z =	-3.4250
53	-0.0448	+	0.0688	I	Z =	-3.5750
54	-0.0490	+	0.0581	I	Z =	-3.7250

55	-0.0517	+	0.0478	I	Z =	-3.8750
56	-0.0533	+	0.0381	I	Z =	-4.0250

BLOCK NO 28 Z DISTANCE = -0.6625

1	0.0420	+	0.0141	I	R =	0.0625
2	0.1242	+	0.0420	I	R =	0.1875
3	0.1550	+	0.0532	I	R =	0.3000
4	0.1457	+	0.0510	I	R =	0.3875
5	0.1095	+	0.0390	I	R =	0.4500
6	0.0581	+	0.0210	I	R =	0.4875
7	0.0601	+	0.0220	I	R =	0.5125
8	0.1254	+	0.0467	I	R =	0.5500
9	0.1311	+	0.0504	I	R =	0.6000
10	0.2034	+	0.0821	I	R =	0.6625
11	0.2051	+	0.0894	I	R =	0.7375
12	0.1991	+	0.0960	I	R =	0.8125
13	0.1254	+	0.0674	I	R =	0.8750
14	0.1170	+	0.0699	I	R =	0.9250
15	0.0547	+	0.0358	I	R =	0.9625
16	0.0519	+	0.0363	I	R =	0.9875
17	0.0511	+	0.0367	I	Z =	-0.0125
18	0.0526	+	0.0368	I	Z =	-0.0375
19	0.1096	+	0.0739	I	Z =	-0.0750
20	0.1159	+	0.0744	I	Z =	-0.1250
21	0.1225	+	0.0748	I	Z =	-0.1750
22	0.1296	+	0.0752	I	Z =	-0.2250
23	0.2090	+	0.1134	I	Z =	-0.2875
24	0.2289	+	0.1141	I	Z =	-0.3625
25	0.2527	+	0.1146	I	Z =	-0.4375
26	0.2828	+	0.1149	I	Z =	-0.5125
27	0.3203	+	0.1151	I	Z =	-0.5875
28	0.5329	+	0.1152	I	Z =	-0.6625
29	0.4184	+	0.1535	I	Z =	-0.7500
30	0.3561	+	0.1530	I	Z =	-0.8500
31	0.3103	+	0.1522	I	Z =	-0.9500
32	0.2748	+	0.1511	I	Z =	-1.0500
33	0.2451	+	0.1496	I	Z =	-1.1500
34	0.2193	+	0.1479	I	Z =	-1.2500
35	0.1961	+	0.1458	I	Z =	-1.3500
36	0.1750	+	0.1434	I	Z =	-1.4500
37	0.1557	+	0.1407	I	Z =	-1.5500
38	0.1696	+	0.1717	I	Z =	-1.6625
39	0.1441	+	0.1666	I	Z =	-1.7875
40	0.1209	+	0.1610	I	Z =	-1.9125
41	0.0998	+	0.1549	I	Z =	-2.0375
42	0.0806	+	0.1484	I	Z =	-2.1625
43	0.0632	+	0.1416	I	Z =	-2.2875
44	0.0475	+	0.1345	I	Z =	-2.4125
45	0.0333	+	0.1271	I	Z =	-2.5375
46	0.0206	+	0.1195	I	Z =	-2.6625

47	0.0092	+	0.1117	I	Z =	-2.7875
48	-0.0008	+	0.1038	I	Z =	-2.9125
49	-0.0096	+	0.0958	I	Z =	-3.0375
50	-0.0173	+	0.0878	I	Z =	-3.1625
51	-0.0239	+	0.0799	I	Z =	-3.2875
52	-0.0359	+	0.0854	I	Z =	-3.4250
53	-0.0422	+	0.0743	I	Z =	-3.5750
54	-0.0471	+	0.0634	I	Z =	-3.7250
55	-0.0505	+	0.0529	I	Z =	-3.8750
56	-0.0527	+	0.0429	I	Z =	-4.0250

BLOCK NO 29 Z DISTANCE = -0.7500

1	0.0376	+	0.0139	I	R =	0.0625
2	0.1109	+	0.0415	I	R =	0.1875
3	0.1379	+	0.0526	I	R =	0.3000
4	0.1289	+	0.0503	I	R =	0.3875
5	0.0966	+	0.0385	I	R =	0.4500
6	0.0511	+	0.0207	I	R =	0.4875
7	0.0528	+	0.0217	I	R =	0.5125
8	0.1099	+	0.0461	I	R =	0.5500
9	0.1146	+	0.0497	I	R =	0.6000
10	0.1773	+	0.0810	I	R =	0.6625
11	0.1787	+	0.0882	I	R =	0.7375
12	0.1740	+	0.0947	I	R =	0.8125
13	0.1104	+	0.0665	I	R =	0.8750
14	0.1039	+	0.0689	I	R =	0.9250
15	0.0490	+	0.0353	I	R =	0.9625
16	0.0468	+	0.0358	I	R =	0.9875
17	0.0463	+	0.0362	I	Z =	-0.0125
18	0.0477	+	0.0363	I	Z =	-0.0375
19	0.0994	+	0.0730	I	Z =	-0.0750
20	0.1051	+	0.0736	I	Z =	-0.1250
21	0.1111	+	0.0741	I	Z =	-0.1750
22	0.1175	+	0.0745	I	Z =	-0.2250
23	0.1890	+	0.1125	I	Z =	-0.2875
24	0.2060	+	0.1133	I	Z =	-0.3625
25	0.2254	+	0.1140	I	Z =	-0.4375
26	0.2484	+	0.1145	I	Z =	-0.5125
27	0.2772	+	0.1149	I	Z =	-0.5875
28	0.3138	+	0.1151	I	Z =	-0.6625
29	0.3650	+	0.1536	I	Z =	-0.7500
30	0.4099	+	0.1534	I	Z =	-0.8500
31	0.3495	+	0.1529	I	Z =	-0.9500
32	0.3054	+	0.1521	I	Z =	-1.0500
33	0.2708	+	0.1509	I	Z =	-1.1500
34	0.2417	+	0.1494	I	Z =	-1.2500
35	0.2163	+	0.1476	I	Z =	-1.3500
36	0.1934	+	0.1455	I	Z =	-1.4500
37	0.1725	+	0.1431	I	Z =	-1.5500
38	0.1889	+	0.1750	I	Z =	-1.6625

39	0.1617	+	0.1702	I	Z =	-1.7875
40	0.1369	+	0.1649	I	Z =	-1.9125
41	0.1144	+	0.1592	I	Z =	-2.0375
42	0.0939	+	0.1530	I	Z =	-2.1625
43	0.0752	+	0.1464	I	Z =	-2.2875
44	0.0583	+	0.1395	I	Z =	-2.4125
45	0.0430	+	0.1323	I	Z =	-2.5375
46	0.0293	+	0.1248	I	Z =	-2.6625
47	0.0170	+	0.1172	I	Z =	-2.7875
48	0.0061	+	0.1093	I	Z =	-2.9125
49	-0.0036	+	0.1014	I	Z =	-3.0375
50	-0.0120	+	0.0934	I	Z =	-3.1625
51	-0.0194	+	0.0854	I	Z =	-3.2875
52	-0.0314	+	0.0920	I	Z =	-3.4250
53	-0.0387	+	0.0807	I	Z =	-3.5750
54	-0.0444	+	0.0697	I	Z =	-3.7250
55	-0.0487	+	0.0590	I	Z =	-3.8750
56	-0.0515	+	0.0487	I	Z =	-4.0250

BLOCK NO 3C Z DISTANCE = -0.8500

1	0.0329	+	0.0137	I	R =	0.0625
2	0.0970	+	0.0408	I	R =	0.1875
3	0.1201	+	0.0517	I	R =	0.3000
4	0.1119	+	0.0495	I	R =	0.3875
5	0.0836	+	0.0379	I	R =	0.4500
6	0.0442	+	0.0204	I	R =	0.4875
7	0.0456	+	0.0213	I	R =	0.5125
8	0.0947	+	0.0453	I	R =	0.5500
9	0.0986	+	0.0489	I	R =	0.6000
10	0.1525	+	0.0796	I	R =	0.6625
11	0.1538	+	0.0867	I	R =	0.7375
12	0.1503	+	0.0931	I	R =	0.8125
13	0.0959	+	0.0653	I	R =	0.8750
14	0.0910	+	0.0677	I	R =	0.9250
15	0.0432	+	0.0347	I	R =	0.9625
16	0.0416	+	0.0352	I	R =	0.9875
17	0.0413	+	0.0355	I	Z =	-0.0125
18	0.0425	+	0.0357	I	Z =	-0.0375
19	0.0888	+	0.0719	I	Z =	-0.0750
20	0.0940	+	0.0725	I	Z =	-0.1250
21	0.0994	+	0.0730	I	Z =	-0.1750
22	0.1051	+	0.0736	I	Z =	-0.2250
23	0.1691	+	0.1113	I	Z =	-0.2875
24	0.1838	+	0.1122	I	Z =	-0.3625
25	0.2001	+	0.1131	I	Z =	-0.4375
26	0.2186	+	0.1138	I	Z =	-0.5125
27	0.2402	+	0.1143	I	Z =	-0.5875
28	0.2668	+	0.1148	I	Z =	-0.6625
29	0.4099	+	0.1534	I	Z =	-0.7500
30	0.6450	+	0.1536	I	Z =	-0.8500

31	0.4099	+	0.1534	I	Z =	-0.9500
32	0.3495	+	0.1529	I	Z =	-1.0500
33	0.3054	+	0.1521	I	Z =	-1.1500
34	0.2708	+	0.1509	I	Z =	-1.2500
35	0.2417	+	0.1494	I	Z =	-1.3500
36	0.2163	+	0.1476	I	Z =	-1.4500
37	0.1934	+	0.1455	I	Z =	-1.5500
38	0.2126	+	0.1784	I	Z =	-1.6625
39	0.1832	+	0.1741	I	Z =	-1.7875
40	0.1565	+	0.1692	I	Z =	-1.9125
41	0.1323	+	0.1638	I	Z =	-2.0375
42	0.1101	+	0.1580	I	Z =	-2.1625
43	0.0900	+	0.1517	I	Z =	-2.2875
44	0.0717	+	0.1451	I	Z =	-2.4125
45	0.0551	+	0.1381	I	Z =	-2.5375
46	0.0402	+	0.1308	I	Z =	-2.6625
47	0.0267	+	0.1233	I	Z =	-2.7875
48	0.0147	+	0.1156	I	Z =	-2.9125
49	0.0040	+	0.1078	I	Z =	-3.0375
50	-0.0054	+	0.0998	I	Z =	-3.1625
51	-0.0136	+	0.0918	I	Z =	-3.2875
52	-0.0256	+	0.0996	I	Z =	-3.4250
53	-0.0340	+	0.0882	I	Z =	-3.5750
54	-0.0408	+	0.0770	I	Z =	-3.7250
55	-0.0460	+	0.0661	I	Z =	-3.8750
56	-0.0498	+	0.0555	I	Z =	-4.0250

BLOCK NO 31 Z DISTANCE = -0.9500

1	0.0287	+	0.0134	I	R =	0.0625
2	0.0845	+	0.0400	I	R =	0.1875
3	0.1044	+	0.0507	I	R =	0.3000
4	0.0970	+	0.0485	I	R =	0.3875
5	0.0723	+	0.0372	I	R =	0.4500
6	0.0382	+	0.0200	I	R =	0.4875
7	0.0394	+	0.0209	I	R =	0.5125
8	0.0818	+	0.0445	I	R =	0.5500
9	0.0851	+	0.0479	I	R =	0.6000
10	0.1315	+	0.0781	I	R =	0.6625
11	0.1328	+	0.0850	I	R =	0.7375
12	0.1303	+	0.0913	I	R =	0.8125
13	0.0836	+	0.0640	I	R =	0.8750
14	0.0797	+	0.0664	I	R =	0.9250
15	0.0381	+	0.0340	I	R =	0.9625
16	0.0368	+	0.0345	I	R =	0.9875
17	0.0366	+	0.0348	I	Z =	-0.0125
18	0.0378	+	0.0350	I	Z =	-0.0375
19	0.0790	+	0.0705	I	Z =	-0.0750
20	0.0838	+	0.0712	I	Z =	-0.1250
21	0.0888	+	0.0719	I	Z =	-0.1750
22	0.0940	+	0.0725	I	Z =	-0.2250

23	0.1512	+	0.1097	I	Z =	-0.2875
24	0.1644	+	0.1109	I	Z =	-0.3625
25	0.1787	+	0.1119	I	Z =	-0.4375
26	0.1945	+	0.1128	I	Z =	-0.5125
27	0.2121	+	0.1136	I	Z =	-0.5875
28	0.2326	+	0.1142	I	Z =	-0.6625
29	0.3495	+	0.1529	I	Z =	-0.7500
30	0.4099	+	0.1534	I	Z =	-0.8500
31	0.6450	+	0.1536	I	Z =	-0.9500
32	0.4099	+	0.1534	I	Z =	-1.0500
33	0.3495	+	0.1529	I	Z =	-1.1500
34	0.3054	+	0.1521	I	Z =	-1.2500
35	0.2708	+	0.1509	I	Z =	-1.3500
36	0.2417	+	0.1494	I	Z =	-1.4500
37	0.2163	+	0.1476	I	Z =	-1.5500
38	0.2384	+	0.1815	I	Z =	-1.6625
39	0.2065	+	0.1776	I	Z =	-1.7875
40	0.1777	+	0.1731	I	Z =	-1.9125
41	0.1515	+	0.1682	I	Z =	-2.0375
42	0.1277	+	0.1627	I	Z =	-2.1625
43	0.1059	+	0.1568	I	Z =	-2.2875
44	0.0862	+	0.1504	I	Z =	-2.4125
45	0.0683	+	0.1437	I	Z =	-2.5375
46	0.0520	+	0.1367	I	Z =	-2.6625
47	0.0374	+	0.1293	I	Z =	-2.7875
48	0.0242	+	0.1218	I	Z =	-2.9125
49	0.0125	+	0.1141	I	Z =	-3.0375
50	0.0021	+	0.1062	I	Z =	-3.1625
51	-0.0071	+	0.0982	I	Z =	-3.2875
52	-0.0190	+	0.1073	I	Z =	-3.4250
53	-0.0286	+	0.0958	I	Z =	-3.5750
54	-0.0365	+	0.0845	I	Z =	-3.7250
55	-0.0427	+	0.0733	I	Z =	-3.8750
56	-0.0474	+	0.0625	I	Z =	-4.0250

BLOCK NO 32 Z DISTANCE = -1.0500

1	0.0250	+	0.0131	I	R =	0.0625
2	0.0734	+	0.0392	I	R =	0.1875
3	0.0905	+	0.0496	I	R =	0.3000
4	0.0840	+	0.0475	I	R =	0.3875
5	0.0626	+	0.0364	I	R =	0.4500
6	0.0330	+	0.0196	I	R =	0.4875
7	0.0340	+	0.0205	I	R =	0.5125
8	0.0707	+	0.0435	I	R =	0.5500
9	0.0735	+	0.0469	I	R =	0.6000
10	0.1136	+	0.0764	I	R =	0.6625
11	0.1149	+	0.0831	I	R =	0.7375
12	0.1130	+	0.0893	I	R =	0.8125
13	0.0728	+	0.0626	I	R =	0.8750
14	0.0697	+	0.0649	I	R =	0.9250

15	0.0334	+	0.0332	I	R =	0.9625
16	0.0324	+	0.0337	I	R =	0.9875
17	0.0323	+	0.0340	I	Z =	-0.0125
18	0.0334	+	0.0342	I	Z =	-0.0375
19	0.0699	+	0.0691	I	Z =	-0.0750
20	0.0744	+	0.0698	I	Z =	-0.1250
21	0.0790	+	0.0705	I	Z =	-0.1750
22	0.0838	+	0.0712	I	Z =	-0.2250
23	0.1351	+	0.1080	I	Z =	-0.2875
24	0.1471	+	0.1093	I	Z =	-0.3625
25	0.1599	+	0.1105	I	Z =	-0.4375
26	0.1738	+	0.1116	I	Z =	-0.5125
27	0.1890	+	0.1125	I	Z =	-0.5875
28	0.2060	+	0.1133	I	Z =	-0.6625
29	0.3054	+	0.1521	I	Z =	-0.7500
30	0.3495	+	0.1529	I	Z =	-0.8500
31	0.4099	+	0.1534	I	Z =	-0.9500
32	0.6450	+	0.1536	I	Z =	-1.0500
33	0.4099	+	0.1534	I	Z =	-1.1500
34	0.3495	+	0.1529	I	Z =	-1.2500
35	0.3054	+	0.1521	I	Z =	-1.3500
36	0.2708	+	0.1509	I	Z =	-1.4500
37	0.2417	+	0.1494	I	Z =	-1.5500
38	0.2667	+	0.1842	I	Z =	-1.6625
39	0.2317	+	0.1808	I	Z =	-1.7875
40	0.2005	+	0.1768	I	Z =	-1.9125
41	0.1722	+	0.1722	I	Z =	-2.0375
42	0.1466	+	0.1671	I	Z =	-2.1625
43	0.1232	+	0.1615	I	Z =	-2.2875
44	0.1018	+	0.1555	I	Z =	-2.4125
45	0.0825	+	0.1491	I	Z =	-2.5375
46	0.0649	+	0.1423	I	Z =	-2.6625
47	0.0490	+	0.1352	I	Z =	-2.7875
48	0.0346	+	0.1279	I	Z =	-2.9125
49	0.0218	+	0.1203	I	Z =	-3.0375
50	0.0103	+	0.1125	I	Z =	-3.1625
51	0.0001	+	0.1046	I	Z =	-3.2875
52	-0.0115	+	0.1150	I	Z =	-3.4250
53	-0.0224	+	0.1035	I	Z =	-3.5750
54	-0.0314	+	0.0920	I	Z =	-3.7250
55	-0.0387	+	0.0807	I	Z =	-3.8750
56	-0.0444	+	0.0697	I	Z =	-4.0250

BLOCK NO 33 Z DISTANCE = -1.1500

1	0.0216	+	0.0128	I	R =	0.0625
2	0.0635	+	0.0383	I	R =	0.1875
3	0.0783	+	0.0485	I	R =	0.3000
4	0.0726	+	0.0464	I	R =	0.3875
5	0.0540	+	0.0355	I	R =	0.4500
6	0.0285	+	0.0191	I	R =	0.4875

7	0.0293	+	0.0200	I	R =	0.5125
8	0.0610	+	0.0425	I	R =	0.5500
9	0.0634	+	0.0458	I	R =	0.6000
10	0.0981	+	0.0745	I	R =	0.6625
11	0.0993	+	0.0811	I	R =	0.7375
12	0.0979	+	0.0871	I	R =	0.8125
13	0.0632	+	0.0611	I	R =	0.8750
14	0.0607	+	0.0633	I	R =	0.9250
15	0.0292	+	0.0324	I	R =	0.9425
16	0.0283	+	0.0329	I	R =	0.9875
17	0.0283	+	0.0332	I	Z =	-0.0125
18	0.0293	+	0.0334	I	Z =	-0.0375
19	0.0616	+	0.0675	I	Z =	-0.0750
20	0.0657	+	0.0683	I	Z =	-0.1250
21	0.0699	+	0.0691	I	Z =	-0.1750
22	0.0744	+	0.0698	I	Z =	-0.2250
23	0.1203	+	0.1061	I	Z =	-0.2875
24	0.1313	+	0.1075	I	Z =	-0.3625
25	0.1430	+	0.1089	I	Z =	-0.4375
26	0.1555	+	0.1101	I	Z =	-0.5125
27	0.1691	+	0.1113	I	Z =	-0.5875
28	0.1838	+	0.1122	I	Z =	-0.6625
29	0.2708	+	0.1509	I	Z =	-0.7500
30	0.3054	+	0.1521	I	Z =	-0.8500
31	0.3495	+	0.1529	I	Z =	-0.9500
32	0.4099	+	0.1534	I	Z =	-1.0500
33	0.6450	+	0.1536	I	Z =	-1.1500
34	0.4099	+	0.1534	I	Z =	-1.2500
35	0.3495	+	0.1529	I	Z =	-1.3500
36	0.3054	+	0.1521	I	Z =	-1.4500
37	0.2708	+	0.1509	I	Z =	-1.5500
38	0.2981	+	0.1865	I	Z =	-1.6625
39	0.2593	+	0.1836	I	Z =	-1.7875
40	0.2252	+	0.1800	I	Z =	-1.9125
41	0.1946	+	0.1759	I	Z =	-2.0375
42	0.1669	+	0.1712	I	Z =	-2.1625
43	0.1417	+	0.1660	I	Z =	-2.2875
44	0.1187	+	0.1604	I	Z =	-2.4125
45	0.0978	+	0.1543	I	Z =	-2.5375
46	0.0788	+	0.1478	I	Z =	-2.6625
47	0.0616	+	0.1409	I	Z =	-2.7875
48	0.0460	+	0.1338	I	Z =	-2.9125
49	0.0319	+	0.1263	I	Z =	-3.0375
50	0.0194	+	0.1187	I	Z =	-3.1625
51	0.0082	+	0.1109	I	Z =	-3.2875
52	-0.0032	+	0.1226	I	Z =	-3.4250
53	-0.0154	+	0.1111	I	Z =	-3.5750
54	-0.0256	+	0.0996	I	Z =	-3.7250
55	-0.0340	+	0.0882	I	Z =	-3.8750
56	-0.0408	+	0.0770	I	Z =	-4.0250

BLOCK NO 34 Z DISTANCE = -1.2500

1	0.0187	+	0.0125	I	R =	0.0625
2	0.0548	+	0.0373	I	R =	0.1875
3	0.0675	+	0.0472	I	R =	0.3000
4	0.0625	+	0.0452	I	R =	0.3875
5	0.0465	+	0.0346	I	R =	0.4500
6	0.0245	+	0.0186	I	R =	0.4875
7	0.0253	+	0.0194	I	R =	0.5125
8	0.0525	+	0.0414	I	R =	0.5500
9	0.0546	+	0.0446	I	R =	0.6000
10	0.0845	+	0.0726	I	R =	0.6625
11	0.0856	+	0.0790	I	R =	0.7375
12	0.0845	+	0.0848	I	R =	0.8125
13	0.0547	+	0.0594	I	R =	0.8750
14	0.0526	+	0.0616	I	R =	0.9250
15	0.0253	+	0.0315	I	R =	0.9625
16	0.0246	+	0.0320	I	R =	0.9875
17	0.0246	+	0.0323	I	Z =	-0.0125
18	0.0255	+	0.0325	I	Z =	-0.0375
19	0.0538	+	0.0658	I	Z =	-0.0750
20	0.0576	+	0.0666	I	Z =	-0.1250
21	0.0616	+	0.0675	I	Z =	-0.1750
22	0.0657	+	0.0683	I	Z =	-0.2250
23	0.1066	+	0.1039	I	Z =	-0.2875
24	0.1167	+	0.1055	I	Z =	-0.3625
25	0.1275	+	0.1071	I	Z =	-0.4375
26	0.1390	+	0.1085	I	Z =	-0.5125
27	0.1512	+	0.1097	I	Z =	-0.5875
28	0.1644	+	0.1109	I	Z =	-0.6625
29	0.2417	+	0.1494	I	Z =	-0.7500
30	0.2708	+	0.1509	I	Z =	-0.8500
31	0.3054	+	0.1521	I	Z =	-0.9500
32	0.3495	+	0.1529	I	Z =	-1.0500
33	0.4099	+	0.1534	I	Z =	-1.1500
34	0.6450	+	0.1536	I	Z =	-1.2500
35	0.4099	+	0.1534	I	Z =	-1.3500
36	0.3495	+	0.1529	I	Z =	-1.4500
37	0.3054	+	0.1521	I	Z =	-1.5500
38	0.3338	+	0.1884	I	Z =	-1.6625
39	0.2899	+	0.1860	I	Z =	-1.7875
40	0.2522	+	0.1829	I	Z =	-1.9125
41	0.2189	+	0.1792	I	Z =	-2.0375
42	0.1889	+	0.1750	I	Z =	-2.1625
43	0.1617	+	0.1702	I	Z =	-2.2875
44	0.1369	+	0.1649	I	Z =	-2.4125
45	0.1144	+	0.1592	I	Z =	-2.5375
46	0.0939	+	0.1530	I	Z =	-2.6625
47	0.0752	+	0.1464	I	Z =	-2.7875
48	0.0583	+	0.1395	I	Z =	-2.9125
49	0.0430	+	0.1323	I	Z =	-3.0375
50	0.0293	+	0.1248	I	Z =	-3.1625

51	0.0170	+	0.1172	I	Z =	-3.2875
52	0.0061	+	0.1303	I	Z =	-3.4250
53	-0.0075	+	0.1188	I	Z =	-3.5750
54	-0.0190	+	0.1073	I	Z =	-3.7250
55	-0.0286	+	0.0959	I	Z =	-3.8750
56	-0.0365	+	0.0845	I	Z =	-4.0250

BLOCK NO 35 Z DISTANCE = -1.3500

1	0.0161	+	0.0122	I	R =	0.0625
2	0.0471	+	0.0363	I	R =	0.1875
3	0.0580	+	0.0459	I	R =	0.3000
4	0.0537	+	0.0439	I	R =	0.3875
5	0.0399	+	0.0336	I	R =	0.4500
6	0.0210	+	0.0181	I	R =	0.4875
7	0.0217	+	0.0189	I	R =	0.5125
8	0.0451	+	0.0402	I	R =	0.5500
9	0.0469	+	0.0433	I	R =	0.6000
10	0.0725	+	0.0705	I	R =	0.6625
11	0.0735	+	0.0767	I	R =	0.7375
12	0.0725	+	0.0823	I	R =	0.8125
13	0.0469	+	0.0577	I	R =	0.8750
14	0.0451	+	0.0598	I	R =	0.9250
15	0.0217	+	0.0306	I	R =	0.9625
16	0.0211	+	0.0310	I	R =	0.9875
17	0.0212	+	0.0314	I	Z =	-0.0125
18	0.0220	+	0.0316	I	Z =	-0.0375
19	0.0466	+	0.0639	I	Z =	-0.0750
20	0.0501	+	0.0649	I	Z =	-0.1250
21	0.0538	+	0.0658	I	Z =	-0.1750
22	0.0576	+	0.0666	I	Z =	-0.2250
23	0.0939	+	0.1015	I	Z =	-0.2875
24	0.1033	+	0.1033	I	Z =	-0.3625
25	0.1133	+	0.1050	I	Z =	-0.4375
26	0.1238	+	0.1066	I	Z =	-0.5125
27	0.1351	+	0.1080	I	Z =	-0.5875
28	0.1471	+	0.1093	I	Z =	-0.6625
29	0.2163	+	0.1476	I	Z =	-0.7500
30	0.2417	+	0.1494	I	Z =	-0.8500
31	0.2708	+	0.1509	I	Z =	-0.9500
32	0.3054	+	0.1521	I	Z =	-1.0500
33	0.3495	+	0.1529	I	Z =	-1.1500
34	0.4099	+	0.1534	I	Z =	-1.2500
35	0.6450	+	0.1536	I	Z =	-1.3500
36	0.4099	+	0.1534	I	Z =	-1.4500
37	0.3495	+	0.1529	I	Z =	-1.5500
38	0.3761	+	0.1899	I	Z =	-1.6625
39	0.3243	+	0.1880	I	Z =	-1.7875
40	0.2819	+	0.1854	I	Z =	-1.9125
41	0.2452	+	0.1822	I	Z =	-2.0375
42	0.2126	+	0.1784	I	Z =	-2.1625

43	0.1832	+	0.1741	I	Z =	-2.2875
44	0.1565	+	0.1692	I	Z =	-2.4125
45	0.1323	+	0.1638	I	Z =	-2.5375
46	0.1101	+	0.1580	I	Z =	-2.6625
47	0.0900	+	0.1517	I	Z =	-2.7875
48	0.0717	+	0.1451	I	Z =	-2.9125
49	0.0551	+	0.1381	I	Z =	-3.0375
50	0.0402	+	0.1308	I	Z =	-3.1625
51	0.0267	+	0.1233	I	Z =	-3.2875
52	0.0163	+	0.1378	I	Z =	-3.4250
53	0.0013	+	0.1265	I	Z =	-3.5750
54	-0.0115	+	0.1150	I	Z =	-3.7250
55	-0.0224	+	0.1035	I	Z =	-3.8750
56	-0.0314	+	0.0920	I	Z =	-4.0250

BLOCK NO 36 Z DISTANCE = -1.4500

1	0.0138	+	0.0118	I	R =	0.0625
2	0.0403	+	0.0352	I	R =	0.1875
3	0.0496	+	0.0445	I	R =	0.3000
4	0.0459	+	0.0426	I	R =	0.3875
5	0.0341	+	0.0326	I	R =	0.4500
6	0.0180	+	0.0175	I	R =	0.4875
7	0.0185	+	0.0183	I	R =	0.5125
8	0.0385	+	0.0390	I	R =	0.5500
9	0.0400	+	0.0420	I	R =	0.6000
10	0.0618	+	0.0683	I	R =	0.6625
11	0.0626	+	0.0743	I	R =	0.7375
12	0.0618	+	0.0797	I	R =	0.8125
13	0.0399	+	0.0559	I	R =	0.8750
14	0.0384	+	0.0578	I	R =	0.9250
15	0.0185	+	0.0296	I	R =	0.9625
16	0.0179	+	0.0300	I	R =	0.9875
17	0.0180	+	0.0303	I	Z =	-0.0125
18	0.0188	+	0.0306	I	Z =	-0.0375
19	0.0399	+	0.0620	I	Z =	-0.0750
20	0.0432	+	0.0630	I	Z =	-0.1250
21	0.0466	+	0.0639	I	Z =	-0.1750
22	0.0501	+	0.0649	I	Z =	-0.2250
23	0.0821	+	0.0990	I	Z =	-0.2875
24	0.0909	+	0.1009	I	Z =	-0.3625
25	0.1001	+	0.1027	I	Z =	-0.4375
26	0.1099	+	0.1045	I	Z =	-0.5125
27	0.1203	+	0.1061	I	Z =	-0.5875
28	0.1313	+	0.1075	I	Z =	-0.6625
29	0.1934	+	0.1455	I	Z =	-0.7500
30	0.2163	+	0.1476	I	Z =	-0.8500
31	0.2417	+	0.1494	I	Z =	-0.9500
32	0.2708	+	0.1509	I	Z =	-1.0500
33	0.3054	+	0.1521	I	Z =	-1.1500
34	0.3495	+	0.1529	I	Z =	-1.2500

35	0.4099	+	0.1534	I	Z =	-1.3500
36	0.6450	+	0.1536	I	Z =	-1.4500
37	0.4099	+	0.1534	I	Z =	-1.5500
38	0.4295	+	0.1910	I	Z =	-1.6625
39	0.3647	+	0.1896	I	Z =	-1.7875
40	0.3153	+	0.1875	I	Z =	-1.9125
41	0.2742	+	0.1848	I	Z =	-2.0375
42	0.2384	+	0.1815	I	Z =	-2.1625
43	0.2065	+	0.1776	I	Z =	-2.2875
44	0.1777	+	0.1731	I	Z =	-2.4125
45	0.1515	+	0.1682	I	Z =	-2.5375
46	0.1277	+	0.1627	I	Z =	-2.6625
47	0.1059	+	0.1568	I	Z =	-2.7875
48	0.0862	+	0.1504	I	Z =	-2.9125
49	0.0683	+	0.1437	I	Z =	-3.0375
50	0.0520	+	0.1367	I	Z =	-3.1625
51	0.0374	+	0.1293	I	Z =	-3.2875
52	0.0276	+	0.1452	I	Z =	-3.4250
53	0.0111	+	0.1340	I	Z =	-3.5750
54	-0.0032	+	0.1226	I	Z =	-3.7250
55	-0.0154	+	0.1111	I	Z =	-3.8750
56	-0.0256	+	0.0996	I	Z =	-4.0250

BLOCK NO 37 Z DISTANCE = -1.5500

1	0.0117	+	0.0114	I	R =	0.0625
2	0.0343	+	0.0340	I	R =	0.1875
3	0.0422	+	0.0430	I	R =	0.3000
4	0.0390	+	0.0412	I	R =	0.3875
5	0.0290	+	0.0315	I	R =	0.4500
6	0.0153	+	0.0169	I	R =	0.4875
7	0.0157	+	0.0177	I	R =	0.5125
8	0.0326	+	0.0377	I	R =	0.5500
9	0.0339	+	0.0406	I	R =	0.6000
10	0.0523	+	0.0660	I	R =	0.6625
11	0.0529	+	0.0717	I	R =	0.7375
12	0.0521	+	0.0770	I	R =	0.8125
13	0.0336	+	0.0539	I	R =	0.8750
14	0.0322	+	0.0558	I	R =	0.9250
15	0.0154	+	0.0286	I	R =	0.9625
16	0.0149	+	0.0290	I	R =	0.9875
17	0.0150	+	0.0293	I	Z =	-0.0125
18	0.0157	+	0.0296	I	Z =	-0.0375
19	0.0337	+	0.0599	I	Z =	-0.0750
20	0.0367	+	0.0610	I	Z =	-0.1250
21	0.0399	+	0.0620	I	Z =	-0.1750
22	0.0432	+	0.0630	I	Z =	-0.2250
23	0.0712	+	0.0962	I	Z =	-0.2875
24	0.0793	+	0.0983	I	Z =	-0.3625
25	0.0879	+	0.1003	I	Z =	-0.4375
26	0.0970	+	0.1021	I	Z =	-0.5125

27	0.1066	+	0.1039	I	Z =	-0.5875
28	0.1167	+	0.1055	I	Z =	-0.6625
29	0.1725	+	0.1431	I	Z =	-0.7500
30	0.1934	+	0.1455	I	Z =	-0.8500
31	0.2163	+	0.1476	I	Z =	-0.9500
32	0.2417	+	0.1494	I	Z =	-1.0500
33	0.2708	+	0.1509	I	Z =	-1.1500
34	0.3054	+	0.1521	I	Z =	-1.2500
35	0.3495	+	0.1529	I	Z =	-1.3500
36	0.4099	+	0.1534	I	Z =	-1.4500
37	0.6450	+	0.1536	I	Z =	-1.5500
38	0.5022	+	0.1917	I	Z =	-1.6625
39	0.4147	+	0.1908	I	Z =	-1.7875
40	0.3539	+	0.1892	I	Z =	-1.9125
41	0.3065	+	0.1870	I	Z =	-2.0375
42	0.2667	+	0.1842	I	Z =	-2.1625
43	0.2317	+	0.1808	I	Z =	-2.2875
44	0.2005	+	0.1768	I	Z =	-2.4125
45	0.1722	+	0.1722	I	Z =	-2.5375
46	0.1466	+	0.1671	I	Z =	-2.6625
47	0.1232	+	0.1615	I	Z =	-2.7875
48	0.1018	+	0.1555	I	Z =	-2.9125
49	0.0825	+	0.1491	I	Z =	-3.0375
50	0.0649	+	0.1423	I	Z =	-3.1625
51	0.0490	+	0.1352	I	Z =	-3.2875
52	0.0400	+	0.1525	I	Z =	-3.4250
53	0.0218	+	0.1415	I	Z =	-3.5750
54	0.0061	+	0.1303	I	Z =	-3.7250
55	-0.0075	+	0.1188	I	Z =	-3.8750
56	-0.0190	+	0.1073	I	Z =	-4.0250

BLOCK NO 38 Z DISTANCE = -1.6625

1	0.0097	+	0.0110	I	R =	0.0625
2	0.0283	+	0.0327	I	R =	0.1875
3	0.0348	+	0.0413	I	R =	0.3000
4	0.0321	+	0.0395	I	R =	0.3875
5	0.0238	+	0.0302	I	R =	0.4500
6	0.0125	+	0.0162	I	R =	0.4875
7	0.0129	+	0.0170	I	R =	0.5125
8	0.0268	+	0.0361	I	R =	0.5500
9	0.0278	+	0.0389	I	R =	0.6000
10	0.0428	+	0.0633	I	R =	0.6625
11	0.0431	+	0.0688	I	R =	0.7375
12	0.0422	+	0.0738	I	R =	0.8125
13	0.0271	+	0.0517	I	R =	0.8750
14	0.0258	+	0.0535	I	R =	0.9250
15	0.0123	+	0.0273	I	R =	0.9625
16	0.0119	+	0.0277	I	R =	0.9875
17	0.0120	+	0.0280	I	Z =	-0.0125
18	0.0126	+	0.0283	I	Z =	-0.0375

19	0.0273	+	0.0575	I	Z =	-0.0750
20	0.0301	+	0.0586	I	Z =	-0.1250
21	0.0330	+	0.0596	I	Z =	-0.1750
22	0.0360	+	0.0607	I	Z =	-0.2250
23	0.0599	+	0.0929	I	Z =	-0.2875
24	0.0673	+	0.0952	I	Z =	-0.3625
25	0.0752	+	0.0973	I	Z =	-0.4375
26	0.0835	+	0.0993	I	Z =	-0.5125
27	0.0924	+	0.1012	I	Z =	-0.5875
28	0.1017	+	0.1030	I	Z =	-0.6625
29	0.1511	+	0.1400	I	Z =	-0.7500
30	0.1701	+	0.1427	I	Z =	-0.8500
31	0.1907	+	0.1452	I	Z =	-0.9500
32	0.2133	+	0.1474	I	Z =	-1.0500
33	0.2384	+	0.1492	I	Z =	-1.1500
34	0.2669	+	0.1507	I	Z =	-1.2500
35	0.3007	+	0.1520	I	Z =	-1.3500
36	0.3433	+	0.1528	I	Z =	-1.4500
37	0.4014	+	0.1534	I	Z =	-1.5500
38	0.7551	+	0.1920	I	Z =	-1.6625
39	0.4919	+	0.1917	I	Z =	-1.7875
40	0.4077	+	0.1907	I	Z =	-1.9125
41	0.3487	+	0.1890	I	Z =	-2.0375
42	0.3023	+	0.1868	I	Z =	-2.1625
43	0.2630	+	0.1839	I	Z =	-2.2875
44	0.2285	+	0.1804	I	Z =	-2.4125
45	0.1976	+	0.1763	I	Z =	-2.5375
46	0.1696	+	0.1717	I	Z =	-2.6625
47	0.1441	+	0.1666	I	Z =	-2.7875
48	0.1209	+	0.1610	I	Z =	-2.9125
49	0.0998	+	0.1549	I	Z =	-3.0375
50	0.0806	+	0.1484	I	Z =	-3.1625
51	0.0632	+	0.1416	I	Z =	-3.2875
52	0.0552	+	0.1605	I	Z =	-3.4250
53	0.0352	+	0.1498	I	Z =	-3.5750
54	0.0177	+	0.1387	I	Z =	-3.7250
55	0.0025	+	0.1274	I	Z =	-3.8750
56	-0.0105	+	0.1159	I	Z =	-4.0250

BLOCK NO 39 Z DISTANCE = -1.7875

1	0.0077	+	0.0104	I	R =	0.0625
2	0.0226	+	0.0311	I	R =	0.1875
3	0.0277	+	0.0393	I	R =	0.3000
4	0.0255	+	0.0376	I	R =	0.3875
5	0.0189	+	0.0288	I	R =	0.4500
6	0.0099	+	0.0155	I	R =	0.4875
7	0.0102	+	0.0162	I	R =	0.5125
8	0.0211	+	0.0344	I	R =	0.5500
9	0.0218	+	0.0370	I	R =	0.6000
10	0.0335	+	0.0602	I	R =	0.6625

11	0.0335	+	0.0654	I	R =	0.7375
12	0.0325	+	0.0700	I	R =	0.8125
13	0.0206	+	0.0490	I	R =	0.8750
14	0.0195	+	0.0507	I	R =	0.9250
15	0.0092	+	0.0259	I	R =	0.9625
16	0.0088	+	0.0263	I	R =	0.9875
17	0.0089	+	0.0266	I	Z =	-0.0125
18	0.0095	+	0.0269	I	Z =	-0.0375
19	0.0208	+	0.0547	I	Z =	-0.0750
20	0.0233	+	0.0558	I	Z =	-0.1250
21	0.0259	+	0.0569	I	Z =	-0.1750
22	0.0287	+	0.0580	I	Z =	-0.2250
23	0.0483	+	0.0891	I	Z =	-0.2875
24	0.0551	+	0.0914	I	Z =	-0.3625
25	0.0623	+	0.0937	I	Z =	-0.4375
26	0.0699	+	0.0959	I	Z =	-0.5125
27	0.0779	+	0.0980	I	Z =	-0.5875
28	0.0864	+	0.1000	I	Z =	-0.6625
29	0.1293	+	0.1362	I	Z =	-0.7500
30	0.1465	+	0.1393	I	Z =	-0.8500
31	0.1652	+	0.1421	I	Z =	-0.9500
32	0.1854	+	0.1446	I	Z =	-1.0500
33	0.2074	+	0.1469	I	Z =	-1.1500
34	0.2318	+	0.1488	I	Z =	-1.2500
35	0.2594	+	0.1504	I	Z =	-1.3500
36	0.2916	+	0.1517	I	Z =	-1.4500
37	0.3315	+	0.1526	I	Z =	-1.5500
38	0.4919	+	0.1917	I	Z =	-1.6625
39	0.7551	+	0.1920	I	Z =	-1.7875
40	0.4919	+	0.1917	I	Z =	-1.9125
41	0.4077	+	0.1907	I	Z =	-2.0375
42	0.3487	+	0.1890	I	Z =	-2.1625
43	0.3023	+	0.1868	I	Z =	-2.2875
44	0.2630	+	0.1839	I	Z =	-2.4125
45	0.2285	+	0.1804	I	Z =	-2.5375
46	0.1976	+	0.1763	I	Z =	-2.6625
47	0.1696	+	0.1717	I	Z =	-2.7875
48	0.1441	+	0.1666	I	Z =	-2.9125
49	0.1209	+	0.1610	I	Z =	-3.0375
50	0.0998	+	0.1549	I	Z =	-3.1625
51	0.0806	+	0.1484	I	Z =	-3.2875
52	0.0739	+	0.1691	I	Z =	-3.4250
53	0.0517	+	0.1588	I	Z =	-3.5750
54	0.0321	+	0.1480	I	Z =	-3.7250
55	0.0150	+	0.1369	I	Z =	-3.8750
56	0.0002	+	0.1255	I	Z =	-4.0250

BLOCK NO 40 Z DISTANCE = -1.9125

1	0.0060	+	0.0099	I	R =	0.0625
2	0.0176	+	0.0295	I	R =	0.1875

3	0.0215	+	0.0373	I	R =	0.3000
4	0.0197	+	0.0356	I	R =	0.3875
5	0.0146	+	0.0272	I	R =	0.4500
6	0.0076	+	0.0146	I	R =	0.4875
7	0.0078	+	0.0153	I	R =	0.5125
8	0.0162	+	0.0325	I	R =	0.5500
9	0.0166	+	0.0350	I	R =	0.6000
10	0.0253	+	0.0569	I	R =	0.6625
11	0.0251	+	0.0618	I	R =	0.7375
12	0.0239	+	0.0662	I	R =	0.8125
13	0.0149	+	0.0463	I	R =	0.8750
14	0.0138	+	0.0479	I	R =	0.9250
15	0.0064	+	0.0245	I	R =	0.9625
16	0.0060	+	0.0248	I	R =	0.9875
17	0.0061	+	0.0251	I	Z =	-0.0125
18	0.0066	+	0.0254	I	Z =	-0.0375
19	0.0149	+	0.0517	I	Z =	-0.0750
20	0.0172	+	0.0529	I	Z =	-0.1250
21	0.0196	+	0.0541	I	Z =	-0.1750
22	0.0220	+	0.0552	I	Z =	-0.2250
23	0.0379	+	0.0850	I	Z =	-0.2875
24	0.0440	+	0.0875	I	Z =	-0.3625
25	0.0506	+	0.0899	I	Z =	-0.4375
26	0.0575	+	0.0922	I	Z =	-0.5125
27	0.0648	+	0.0944	I	Z =	-0.5875
28	0.0725	+	0.0966	I	Z =	-0.6625
29	0.1095	+	0.1320	I	Z =	-0.7500
30	0.1252	+	0.1354	I	Z =	-0.8500
31	0.1421	+	0.1385	I	Z =	-0.9500
32	0.1604	+	0.1414	I	Z =	-1.0500
33	0.1801	+	0.1440	I	Z =	-1.1500
34	0.2017	+	0.1463	I	Z =	-1.2500
35	0.2255	+	0.1483	I	Z =	-1.3500
36	0.2521	+	0.1500	I	Z =	-1.4500
37	0.2830	+	0.1514	I	Z =	-1.5500
38	0.4077	+	0.1907	I	Z =	-1.6625
39	0.4919	+	0.1917	I	Z =	-1.7875
40	0.7551	+	0.1920	I	Z =	-1.9125
41	0.4919	+	0.1917	I	Z =	-2.0375
42	0.4077	+	0.1907	I	Z =	-2.1625
43	0.3487	+	0.1890	I	Z =	-2.2875
44	0.3023	+	0.1868	I	Z =	-2.4125
45	0.2630	+	0.1839	I	Z =	-2.5375
46	0.2285	+	0.1804	I	Z =	-2.6625
47	0.1976	+	0.1763	I	Z =	-2.7875
48	0.1696	+	0.1717	I	Z =	-2.9125
49	0.1441	+	0.1666	I	Z =	-3.0375
50	0.1209	+	0.1610	I	Z =	-3.1625
51	0.0998	+	0.1549	I	Z =	-3.2875
52	0.0946	+	0.1773	I	Z =	-3.4250
53	0.0700	+	0.1674	I	Z =	-3.5750
54	0.0482	+	0.1570	I	Z =	-3.7250
55	0.0291	+	0.1461	I	Z =	-3.8750

56	0.0124	+	0.1350	I	Z =	-4.0250

BLOCK NO 41 Z DISTANCE = -2.0375

1	0.0046	+	0.0093	I	R =	0.0625
2	0.0133	+	0.0278	I	R =	0.1875
3	0.0161	+	0.0351	I	R =	0.3000
4	0.0147	+	0.0336	I	R =	0.3875
5	0.0108	+	0.0257	I	R =	0.4500
6	0.0056	+	0.0138	I	R =	0.4875
7	0.0058	+	0.0144	I	R =	0.5125
8	0.0119	+	0.0306	I	R =	0.5500
9	0.0121	+	0.0330	I	R =	0.6000
10	0.0182	+	0.0536	I	R =	0.6625
11	0.0176	+	0.0582	I	R =	0.7375
12	0.0164	+	0.0623	I	R =	0.8125
13	0.0099	+	0.0435	I	R =	0.8750
14	0.0088	+	0.0450	I	R =	0.9250
15	0.0039	+	0.0230	I	R =	0.9625
16	0.0036	+	0.0233	I	R =	0.9875
17	0.0036	+	0.0236	I	Z =	-0.0125
18	0.0041	+	0.0239	I	Z =	-0.0375
19	0.0097	+	0.0487	I	Z =	-0.0750
20	0.0117	+	0.0499	I	Z =	-0.1250
21	0.0138	+	0.0511	I	Z =	-0.1750
22	0.0161	+	0.0523	I	Z =	-0.2250
23	0.0285	+	0.0807	I	Z =	-0.2875
24	0.0340	+	0.0833	I	Z =	-0.3625
25	0.0399	+	0.0858	I	Z =	-0.4375
26	0.0462	+	0.0883	I	Z =	-0.5125
27	0.0528	+	0.0907	I	Z =	-0.5875
28	0.0599	+	0.0929	I	Z =	-0.6625
29	0.0915	+	0.1274	I	Z =	-0.7500
30	0.1058	+	0.1311	I	Z =	-0.8500
31	0.1212	+	0.1345	I	Z =	-0.9500
32	0.1378	+	0.1378	I	Z =	-1.0500
33	0.1557	+	0.1407	I	Z =	-1.1500
34	0.1750	+	0.1434	I	Z =	-1.2500
35	0.1961	+	0.1458	I	Z =	-1.3500
36	0.2193	+	0.1479	I	Z =	-1.4500
37	0.2451	+	0.1496	I	Z =	-1.5500
38	0.3487	+	0.1890	I	Z =	-1.6625
39	0.4077	+	0.1907	I	Z =	-1.7875
40	0.4919	+	0.1917	I	Z =	-1.9125
41	0.7551	+	0.1920	I	Z =	-2.0375
42	0.4919	+	0.1917	I	Z =	-2.1625
43	0.4077	+	0.1907	I	Z =	-2.2875
44	0.3487	+	0.1890	I	Z =	-2.4125
45	0.3023	+	0.1868	I	Z =	-2.5375
46	0.2630	+	0.1839	I	Z =	-2.6625
47	0.2285	+	0.1804	I	Z =	-2.7875

48	0.1976	+	0.1763	I	Z =	-2.9125
49	0.1696	+	0.1717	I	Z =	-3.0375
50	0.1441	+	0.1666	I	Z =	-3.1625
51	0.1209	+	0.1610	I	Z =	-3.2875
52	0.1174	+	0.1851	I	Z =	-3.4250
53	0.0903	+	0.1757	I	Z =	-3.5750
54	0.0662	+	0.1657	I	Z =	-3.7250
55	0.0449	+	0.1552	I	Z =	-3.8750
56	0.0261	+	0.1443	I	Z =	-4.0250

BLOCK NO 42 Z DISTANCE = -2.1625

1	0.0033	+	0.0088	I	R =	0.0625
2	0.0095	+	0.0261	I	R =	0.1875
3	0.0115	+	0.0330	I	R =	0.3000
4	0.0104	+	0.0315	I	R =	0.3875
5	0.0076	+	0.0241	I	R =	0.4500
6	0.0039	+	0.0129	I	R =	0.4875
7	0.0040	+	0.0135	I	R =	0.5125
8	0.0081	+	0.0287	I	R =	0.5500
9	0.0081	+	0.0309	I	R =	0.6000
10	0.0119	+	0.0502	I	R =	0.6625
11	0.0111	+	0.0544	I	R =	0.7375
12	0.0097	+	0.0582	I	R =	0.8125
13	0.0054	+	0.0407	I	R =	0.8750
14	0.0043	+	0.0420	I	R =	0.9250
15	0.0017	+	0.0215	I	R =	0.9625
16	0.0014	+	0.0217	I	R =	0.9875
17	0.0014	+	0.0220	I	Z =	-0.0125
18	0.0018	+	0.0223	I	Z =	-0.0375
19	0.0050	+	0.0456	I	Z =	-0.0750
20	0.0068	+	0.0469	I	Z =	-0.1250
21	0.0087	+	0.0481	I	Z =	-0.1750
22	0.0107	+	0.0493	I	Z =	-0.2250
23	0.0199	+	0.0763	I	Z =	-0.2875
24	0.0249	+	0.0789	I	Z =	-0.3625
25	0.0303	+	0.0816	I	Z =	-0.4375
26	0.0359	+	0.0841	I	Z =	-0.5125
27	0.0420	+	0.0866	I	Z =	-0.5875
28	0.0483	+	0.0891	I	Z =	-0.6625
29	0.0751	+	0.1224	I	Z =	-0.7500
30	0.0881	+	0.1264	I	Z =	-0.8500
31	0.1021	+	0.1302	I	Z =	-0.9500
32	0.1172	+	0.1337	I	Z =	-1.0500
33	0.1335	+	0.1370	I	Z =	-1.1500
34	0.1511	+	0.1400	I	Z =	-1.2500
35	0.1701	+	0.1427	I	Z =	-1.3500
36	0.1907	+	0.1452	I	Z =	-1.4500
37	0.2133	+	0.1474	I	Z =	-1.5500
38	0.3023	+	0.1868	I	Z =	-1.6625
39	0.3487	+	0.1890	I	Z =	-1.7875

40	0.4077	+	0.1907	I	Z =	-1.9125
41	0.4919	+	0.1917	I	Z =	-2.0375
42	0.7551	+	0.1920	I	Z =	-2.1625
43	0.4919	+	0.1917	I	Z =	-2.2875
44	0.4077	+	0.1907	I	Z =	-2.4125
45	0.3487	+	0.1890	I	Z =	-2.5375
46	0.3023	+	0.1868	I	Z =	-2.6625
47	0.2630	+	0.1839	I	Z =	-2.7875
48	0.2285	+	0.1804	I	Z =	-2.9125
49	0.1976	+	0.1763	I	Z =	-3.0375
50	0.1696	+	0.1717	I	Z =	-3.1625
51	0.1441	+	0.1666	I	Z =	-3.2875
52	0.1425	+	0.1924	I	Z =	-3.4250
53	0.1127	+	0.1836	I	Z =	-3.5750
54	0.0861	+	0.1741	I	Z =	-3.7250
55	0.0625	+	0.1640	I	Z =	-3.8750
56	0.0416	+	0.1534	I	Z =	-4.0250

BLOCK NO 43 Z DISTANCE = -2.2875

1	0.0022	+	0.0082	I	R =	0.0625
2	0.0063	+	0.0243	I	R =	0.1875
3	0.0075	+	0.0308	I	R =	0.3000
4	0.0066	+	0.0294	I	R =	0.3875
5	0.0047	+	0.0225	I	R =	0.4500
6	0.0024	+	0.0121	I	R =	0.4875
7	0.0024	+	0.0126	I	R =	0.5125
8	0.0048	+	0.0268	I	R =	0.5500
9	0.0047	+	0.0288	I	R =	0.6000
10	0.0065	+	0.0467	I	R =	0.6625
11	0.0054	+	0.0506	I	R =	0.7375
12	0.0038	+	0.0541	I	R =	0.8125
13	0.0014	+	0.0378	I	R =	0.8750
14	0.0004	+	0.0390	I	R =	0.9250
15	-0.0002	+	0.0199	I	R =	0.9625
16	-0.0006	+	0.0202	I	R =	0.9875
17	-0.0005	+	0.0204	I	Z =	-0.0125
18	-0.0002	+	0.0208	I	Z =	-0.0375
19	0.0008	+	0.0425	I	Z =	-0.0750
20	0.0024	+	0.0437	I	Z =	-0.1250
21	0.0041	+	0.0450	I	Z =	-0.1750
22	0.0059	+	0.0462	I	Z =	-0.2250
23	0.0123	+	0.0717	I	Z =	-0.2875
24	0.0168	+	0.0745	I	Z =	-0.3625
25	0.0216	+	0.0772	I	Z =	-0.4375
26	0.0267	+	0.0798	I	Z =	-0.5125
27	0.0321	+	0.0824	I	Z =	-0.5875
28	0.0379	+	0.0850	I	Z =	-0.6625
29	0.0602	+	0.1172	I	Z =	-0.7500
30	0.0720	+	0.1214	I	Z =	-0.8500
31	0.0847	+	0.1254	I	Z =	-0.9500

32	0.0985	+	0.1292	I	Z =	-1.0500
33	0.1133	+	0.1328	I	Z =	-1.1500
34	0.1293	+	0.1362	I	Z =	-1.2500
35	0.1465	+	0.1393	I	Z =	-1.3500
36	0.1652	+	0.1421	I	Z =	-1.4500
37	0.1854	+	0.1446	I	Z =	-1.5500
38	0.2630	+	0.1839	I	Z =	-1.6625
39	0.3023	+	0.1868	I	Z =	-1.7875
40	0.3487	+	0.1890	I	Z =	-1.9125
41	0.4077	+	0.1907	I	Z =	-2.0375
42	0.4919	+	0.1917	I	Z =	-2.1625
43	0.7551	+	0.1920	I	Z =	-2.2875
44	0.4919	+	0.1917	I	Z =	-2.4125
45	0.4077	+	0.1907	I	Z =	-2.5375
46	0.3487	+	0.1890	I	Z =	-2.6625
47	0.3023	+	0.1868	I	Z =	-2.7875
48	0.2630	+	0.1839	I	Z =	-2.9125
49	0.2285	+	0.1804	I	Z =	-3.0375
50	0.1976	+	0.1763	I	Z =	-3.1625
51	0.1696	+	0.1717	I	Z =	-3.2875
52	0.1701	+	0.1992	I	Z =	-3.4250
53	0.1373	+	0.1910	I	Z =	-3.5750
54	0.1080	+	0.1821	I	Z =	-3.7250
55	0.0819	+	0.1724	I	Z =	-3.8750
56	0.0588	+	0.1623	I	Z =	-4.0250

BLOCK NO 44 Z DISTANCE = -2.4125

1	0.0012	+	0.0076	I	R =	0.0625
2	0.0035	+	0.0226	I	R =	0.1875
3	0.0040	+	0.0285	I	R =	0.3000
4	0.0034	+	0.0272	I	R =	0.3875
5	0.0023	+	0.0208	I	R =	0.4500
6	0.0011	+	0.0112	I	R =	0.4875
7	0.0011	+	0.0117	I	R =	0.5125
8	0.0020	+	0.0248	I	R =	0.5500
9	0.0017	+	0.0267	I	R =	0.6000
10	0.0017	+	0.0432	I	R =	0.6625
11	0.0004	+	0.0468	I	R =	0.7375
12	-0.0013	+	0.0500	I	R =	0.8125
13	-0.0020	+	0.0349	I	R =	0.8750
14	-0.0030	+	0.0360	I	R =	0.9250
15	-0.0020	+	0.0184	I	R =	0.9625
16	-0.0023	+	0.0186	I	R =	0.9875
17	-0.0023	+	0.0188	I	Z =	-0.0125
18	-0.0019	+	0.0192	I	Z =	-0.0375
19	-0.0029	+	0.0393	I	Z =	-0.0750
20	-0.0015	+	0.0406	I	Z =	-0.1250
21	0.0000	+	0.0418	I	Z =	-0.1750
22	0.0016	+	0.0431	I	Z =	-0.2250
23	0.0055	+	0.0670	I	Z =	-0.2875

24	0.0095	+	0.0698	I	Z =	-0.3625
25	0.0138	+	0.0726	I	Z =	-0.4375
26	0.0183	+	0.0754	I	Z =	-0.5125
27	0.0232	+	0.0781	I	Z =	-0.5875
28	0.0285	+	0.0807	I	Z =	-0.6625
29	0.0466	+	0.1116	I	Z =	-0.7500
30	0.0573	+	0.1161	I	Z =	-0.8500
31	0.0689	+	0.1203	I	Z =	-0.9500
32	0.0815	+	0.1244	I	Z =	-1.0500
33	0.0950	+	0.1283	I	Z =	-1.1500
34	0.1095	+	0.1320	I	Z =	-1.2500
35	0.1252	+	0.1354	I	Z =	-1.3500
36	0.1421	+	0.1385	I	Z =	-1.4500
37	0.1604	+	0.1414	I	Z =	-1.5500
38	0.2285	+	0.1804	I	Z =	-1.6625
39	0.2630	+	0.1839	I	Z =	-1.7875
40	0.3023	+	0.1868	I	Z =	-1.9125
41	0.3487	+	0.1890	I	Z =	-2.0375
42	0.4077	+	0.1907	I	Z =	-2.1625
43	0.4919	+	0.1917	I	Z =	-2.2875
44	0.7551	+	0.1920	I	Z =	-2.4125
45	0.4919	+	0.1917	I	Z =	-2.5375
46	0.4077	+	0.1907	I	Z =	-2.6625
47	0.3487	+	0.1890	I	Z =	-2.7875
48	0.3023	+	0.1868	I	Z =	-2.9125
49	0.2630	+	0.1839	I	Z =	-3.0375
50	0.2285	+	0.1804	I	Z =	-3.1625
51	0.1976	+	0.1763	I	Z =	-3.2875
52	0.2003	+	0.2054	I	Z =	-3.4250
53	0.1644	+	0.1979	I	Z =	-3.5750
54	0.1322	+	0.1896	I	Z =	-3.7250
55	0.1035	+	0.1805	I	Z =	-3.8750
56	0.0779	+	0.1708	I	Z =	-4.0250

BLOCK NO 45 Z DISTANCE = -2.5375

1	0.0004	+	0.0070	I	R =	0.0625
2	0.0011	+	0.0208	I	R =	0.1875
3	0.0010	+	0.0263	I	R =	0.3000
4	0.0005	+	0.0251	I	R =	0.3875
5	0.0001	+	0.0192	I	R =	0.4500
6	-0.0000	+	0.0103	I	R =	0.4875
7	-0.0001	+	0.0107	I	R =	0.5125
8	-0.0005	+	0.0228	I	R =	0.5500
9	-0.0009	+	0.0245	I	R =	0.6000
10	-0.0024	+	0.0398	I	R =	0.6625
11	-0.0038	+	0.0430	I	R =	0.7375
12	-0.0057	+	0.0459	I	R =	0.8125
13	-0.0050	+	0.0320	I	R =	0.8750
14	-0.0060	+	0.0330	I	R =	0.9250
15	-0.0034	+	0.0168	I	R =	0.9625

16	-0.0037	+	0.0170	I	R	=	0.9875
17	-0.0037	+	0.0172	I	Z	=	-0.0125
18	-0.0035	+	0.0176	I	Z	=	-0.0375
19	-0.0061	+	0.0361	I	Z	=	-0.0750
20	-0.0048	+	0.0374	I	Z	=	-0.1250
21	-0.0035	+	0.0386	I	Z	=	-0.1750
22	-0.0022	+	0.0399	I	Z	=	-0.2250
23	-0.0005	+	0.0623	I	Z	=	-0.2875
24	0.0030	+	0.0651	I	Z	=	-0.3625
25	0.0068	+	0.0660	I	Z	=	-0.4375
26	0.0109	+	0.0708	I	Z	=	-0.5125
27	0.0153	+	0.0735	I	Z	=	-0.5875
28	0.0199	+	0.0763	I	Z	=	-0.6625
29	0.0344	+	0.1058	I	Z	=	-0.7500
30	0.0441	+	0.1105	I	Z	=	-0.8500
31	0.0546	+	0.1150	I	Z	=	-0.9500
32	0.0659	+	0.1193	I	Z	=	-1.0500
33	0.0782	+	0.1234	I	Z	=	-1.1500
34	0.0915	+	0.1274	I	Z	=	-1.2500
35	0.1058	+	0.1311	I	Z	=	-1.3500
36	0.1212	+	0.1345	I	Z	=	-1.4500
37	0.1378	+	0.1378	I	Z	=	-1.5500
38	0.1976	+	0.1763	I	Z	=	-1.6625
39	0.2285	+	0.1804	I	Z	=	-1.7875
40	0.2630	+	0.1839	I	Z	=	-1.9125
41	0.3023	+	0.1868	I	Z	=	-2.0375
42	0.3487	+	0.1890	I	Z	=	-2.1625
43	0.4077	+	0.1907	I	Z	=	-2.2875
44	0.4919	+	0.1917	I	Z	=	-2.4125
45	0.7551	+	0.1920	I	Z	=	-2.5375
46	0.4919	+	0.1917	I	Z	=	-2.6625
47	0.4077	+	0.1907	I	Z	=	-2.7875
48	0.3487	+	0.1890	I	Z	=	-2.9125
49	0.3023	+	0.1868	I	Z	=	-3.0375
50	0.2630	+	0.1839	I	Z	=	-3.1625
51	0.2285	+	0.1804	I	Z	=	-3.2875
52	0.2336	+	0.2111	I	Z	=	-3.4250
53	0.1941	+	0.2043	I	Z	=	-3.5750
54	0.1588	+	0.1966	I	Z	=	-3.7250
55	0.1272	+	0.1881	I	Z	=	-3.8750
56	0.0990	+	0.1789	I	Z	=	-4.0250

BLOCK NO 46 Z DISTANCE = -2.6625

1	-0.0003	+	0.0064	I	R	=	0.0625
2	-0.0010	+	0.0191	I	R	=	0.1875
3	-0.0016	+	0.0241	I	R	=	0.3000
4	-0.0019	+	0.0230	I	R	=	0.3875
5	-0.0017	+	0.0175	I	R	=	0.4500
6	-0.0010	+	0.0094	I	R	=	0.4875
7	-0.0011	+	0.0098	I	R	=	0.5125

8	-0.0026	+	0.0209	I	R	=	0.5500
9	-0.0031	+	0.0224	I	R	=	0.6000
10	-0.0059	+	0.0363	I	R	=	0.6625
11	-0.0075	+	0.0392	I	R	=	0.7375
12	-0.0094	+	0.0418	I	R	=	0.8125
13	-0.0075	+	0.0291	I	R	=	0.8750
14	-0.0086	+	0.0299	I	R	=	0.9250
15	-0.0047	+	0.0153	I	R	=	0.9625
16	-0.0050	+	0.0154	I	R	=	0.9875
17	-0.0050	+	0.0157	I	Z	=	-0.0125
18	-0.0048	+	0.0160	I	Z	=	-0.0375
19	-0.0088	+	0.0329	I	Z	=	-0.0750
20	-0.0078	+	0.0342	I	Z	=	-0.1250
21	-0.0066	+	0.0355	I	Z	=	-0.1750
22	-0.0055	+	0.0367	I	Z	=	-0.2250
23	-0.0058	+	0.0575	I	Z	=	-0.2875
24	-0.0027	+	0.0604	I	Z	=	-0.3625
25	0.0006	+	0.0632	I	Z	=	-0.4375
26	0.0042	+	0.0661	I	Z	=	-0.5125
27	0.0081	+	0.0689	I	Z	=	-0.5875
28	0.0123	+	0.0717	I	Z	=	-0.6625
29	0.0234	+	0.0999	I	Z	=	-0.7500
30	0.0321	+	0.1047	I	Z	=	-0.8500
31	0.0416	+	0.1093	I	Z	=	-0.9500
32	0.0519	+	0.1139	I	Z	=	-1.0500
33	0.0630	+	0.1182	I	Z	=	-1.1500
34	0.0751	+	0.1224	I	Z	=	-1.2500
35	0.0881	+	0.1264	I	Z	=	-1.3500
36	0.1021	+	0.1302	I	Z	=	-1.4500
37	0.1172	+	0.1337	I	Z	=	-1.5500
38	0.1696	+	0.1717	I	Z	=	-1.6625
39	0.1976	+	0.1763	I	Z	=	-1.7875
40	0.2285	+	0.1804	I	Z	=	-1.9125
41	0.2630	+	0.1839	I	Z	=	-2.0375
42	0.3023	+	0.1868	I	Z	=	-2.1625
43	0.3487	+	0.1890	I	Z	=	-2.2875
44	0.4077	+	0.1907	I	Z	=	-2.4125
45	0.4919	+	0.1917	I	Z	=	-2.5375
46	0.7551	+	0.1920	I	Z	=	-2.6625
47	0.4919	+	0.1917	I	Z	=	-2.7875
48	0.4077	+	0.1907	I	Z	=	-2.9125
49	0.3487	+	0.1890	I	Z	=	-3.0375
50	0.3023	+	0.1868	I	Z	=	-3.1625
51	0.2630	+	0.1839	I	Z	=	-3.2875
52	0.2704	+	0.2160	I	Z	=	-3.4250
53	0.2267	+	0.2100	I	Z	=	-3.5750
54	0.1879	+	0.2030	I	Z	=	-3.7250
55	0.1532	+	0.1952	I	Z	=	-3.8750
56	0.1223	+	0.1866	I	Z	=	-4.0250

BLOCK NO 47 Z DISTANCE = -2.7875

1	-0.0009	+	0.0058	I	R =	0.0625
2	-0.0027	+	0.0173	I	R =	0.1875
3	-0.0037	+	0.0219	I	R =	0.3000
4	-0.0039	+	0.0209	I	R =	0.3875
5	-0.0032	+	0.0159	I	R =	0.4500
6	-0.0018	+	0.0085	I	R =	0.4875
7	-0.0019	+	0.0089	I	R =	0.5125
8	-0.0043	+	0.0189	I	R =	0.5500
9	-0.0050	+	0.0203	I	R =	0.6000
10	-0.0088	+	0.0328	I	R =	0.6625
11	-0.0106	+	0.0354	I	R =	0.7375
12	-0.0126	+	0.0377	I	R =	0.8125
13	-0.0096	+	0.0262	I	R =	0.8750
14	-0.0107	+	0.0270	I	R =	0.9250
15	-0.0058	+	0.0137	I	R =	0.9625
16	-0.0060	+	0.0139	I	R =	0.9875
17	-0.0061	+	0.0141	I	Z =	-0.0125
18	-0.0059	+	0.0144	I	Z =	-0.0375
19	-0.0112	+	0.0297	I	Z =	-0.0750
20	-0.0103	+	0.0310	I	Z =	-0.1250
21	-0.0093	+	0.0323	I	Z =	-0.1750
22	-0.0083	+	0.0335	I	Z =	-0.2250
23	-0.0104	+	0.0527	I	Z =	-0.2875
24	-0.0077	+	0.0556	I	Z =	-0.3625
25	-0.0048	+	0.0585	I	Z =	-0.4375
26	-0.0016	+	0.0613	I	Z =	-0.5125
27	0.0018	+	0.0642	I	Z =	-0.5875
28	0.0055	+	0.0670	I	Z =	-0.6625
29	0.0136	+	0.0937	I	Z =	-0.7500
30	0.0214	+	0.0987	I	Z =	-0.8500
31	0.0299	+	0.1035	I	Z =	-0.9500
32	0.0392	+	0.1082	I	Z =	-1.0500
33	0.0492	+	0.1127	I	Z =	-1.1500
34	0.0602	+	0.1172	I	Z =	-1.2500
35	0.0720	+	0.1214	I	Z =	-1.3500
36	0.0847	+	0.1254	I	Z =	-1.4500
37	0.0985	+	0.1292	I	Z =	-1.5500
38	0.1441	+	0.1666	I	Z =	-1.6625
39	0.1696	+	0.1717	I	Z =	-1.7875
40	0.1976	+	0.1763	I	Z =	-1.9125
41	0.2285	+	0.1804	I	Z =	-2.0375
42	0.2630	+	0.1839	I	Z =	-2.1625
43	0.3023	+	0.1868	I	Z =	-2.2875
44	0.3487	+	0.1890	I	Z =	-2.4125
45	0.4077	+	0.1907	I	Z =	-2.5375
46	0.4919	+	0.1917	I	Z =	-2.6625
47	0.7551	+	0.1920	I	Z =	-2.7875
48	0.4919	+	0.1917	I	Z =	-2.9125
49	0.4077	+	0.1907	I	Z =	-3.0375
50	0.3487	+	0.1890	I	Z =	-3.1625

51	0.3023	+	0.1868	I	Z =	-3.2875
52	0.3113	+	0.2203	I	Z =	-3.4250
53	0.2627	+	0.2151	I	Z =	-3.5750
54	0.2199	+	0.2089	I	Z =	-3.7250
55	0.1819	+	0.2018	I	Z =	-3.8750
56	0.1478	+	0.1938	I	Z =	-4.0250

BLOCK NO 48 Z DISTANCE = -2.9125

1	-0.0014	+	0.0053	I	R =	0.0625
2	-0.0042	+	0.0156	I	R =	0.1875
3	-0.0056	+	0.0197	I	R =	0.3000
4	-0.0056	+	0.0188	I	R =	0.3875
5	-0.0045	+	0.0143	I	R =	0.4500
6	-0.0025	+	0.0077	I	R =	0.4875
7	-0.0027	+	0.0080	I	R =	0.5125
8	-0.0058	+	0.0170	I	R =	0.5500
9	-0.0066	+	0.0182	I	R =	0.6000
10	-0.0113	+	0.0294	I	R =	0.6625
11	-0.0132	+	0.0317	I	R =	0.7375
12	-0.0153	+	0.0337	I	R =	0.8125
13	-0.0114	+	0.0234	I	R =	0.8750
14	-0.0125	+	0.0240	I	R =	0.9250
15	-0.0066	+	0.012	I	R =	0.9625
16	-0.0069	+	0.0123	I	R =	0.9875
17	-0.0070	+	0.0125	I	Z =	-0.0125
18	-0.0068	+	0.0128	I	Z =	-0.0375
19	-0.0131	+	0.0266	I	Z =	-0.0750
20	-0.0124	+	0.0278	I	Z =	-0.1250
21	-0.0116	+	0.0291	I	Z =	-0.1750
22	-0.0107	+	0.0304	I	Z =	-0.2250
23	-0.0143	+	0.0479	I	Z =	-0.2875
24	-0.0120	+	0.0508	I	Z =	-0.3625
25	-0.0095	+	0.0537	I	Z =	-0.4375
26	-0.0068	+	0.0565	I	Z =	-0.5125
27	-0.0038	+	0.0594	I	Z =	-0.5875
28	-0.0005	+	0.0623	I	Z =	-0.6625
29	0.0048	+	0.0875	I	Z =	-0.7500
30	0.0118	+	0.0925	I	Z =	-0.8500
31	0.0194	+	0.0974	I	Z =	-0.9500
32	0.0277	+	0.1023	I	Z =	-1.0500
33	0.0368	+	0.1070	I	Z =	-1.1500
34	0.0466	+	0.1116	I	Z =	-1.2500
35	0.0573	+	0.1161	I	Z =	-1.3500
36	0.0689	+	0.1203	I	Z =	-1.4500
37	0.0815	+	0.1244	I	Z =	-1.5500
38	0.1209	+	0.1610	I	Z =	-1.6625
39	0.1441	+	0.1666	I	Z =	-1.7875
40	0.1696	+	0.1717	I	Z =	-1.9125
41	0.1976	+	0.1763	I	Z =	-2.0375
42	0.2285	+	0.1804	I	Z =	-2.1625

43	0.2630	+	0.1839	I	Z =	-2.2875
44	0.3023	+	0.1868	I	Z =	-2.4125
45	0.3487	+	0.1890	I	Z =	-2.5375
46	0.4077	+	0.1907	I	Z =	-2.6625
47	0.4919	+	0.1917	I	Z =	-2.7875
48	0.7551	+	0.1920	I	Z =	-2.9125
49	0.4919	+	0.1917	I	Z =	-3.0375
50	0.4077	+	0.1907	I	Z =	-3.1625
51	0.3487	+	0.1890	I	Z =	-3.2875
52	0.3578	+	0.2238	I	Z =	-3.4250
53	0.3027	+	0.2195	I	Z =	-3.5750
54	0.2552	+	0.2141	I	Z =	-3.7250
55	0.2133	+	0.2078	I	Z =	-3.8750
56	0.1759	+	0.2005	I	Z =	-4.0250

BLOCK NO 49 Z DISTANCE = -3.0375

1	-0.0018	+	0.0047	I	R =	0.0625
2	-0.0054	+	0.0140	I	R =	0.1875
3	-0.0071	+	0.0176	I	R =	0.3000
4	-0.0070	+	0.0167	I	R =	0.3875
5	-0.0056	+	0.0127	I	R =	0.4500
6	-0.0030	+	0.0068	I	R =	0.4875
7	-0.0032	+	0.0071	I	R =	0.5125
8	-0.0070	+	0.0151	I	R =	0.5500
9	-0.0078	+	0.0162	I	R =	0.6000
10	-0.0133	+	0.0261	I	R =	0.6625
11	-0.0153	+	0.0281	I	R =	0.7375
12	-0.0174	+	0.0298	I	R =	0.8125
13	-0.0128	+	0.0206	I	R =	0.8750
14	-0.0139	+	0.0211	I	R =	0.9250
15	-0.0073	+	0.0107	I	R =	0.9625
16	-0.0076	+	0.0108	I	R =	0.9875
17	-0.0077	+	0.0110	I	Z =	-0.0125
18	-0.0075	+	0.0113	I	Z =	-0.0375
19	-0.0147	+	0.0235	I	Z =	-0.0750
20	-0.0141	+	0.0247	I	Z =	-0.1250
21	-0.0135	+	0.0260	I	Z =	-0.1750
22	-0.0127	+	0.0272	I	Z =	-0.2250
23	-0.0177	+	0.0432	I	Z =	-0.2875
24	-0.0157	+	0.0460	I	Z =	-0.3625
25	-0.0136	+	0.0489	I	Z =	-0.4375
26	-0.0112	+	0.0517	I	Z =	-0.5125
27	-0.0086	+	0.0546	I	Z =	-0.5875
28	-0.0058	+	0.0575	I	Z =	-0.6625
29	-0.0029	+	0.0811	I	Z =	-0.7500
30	0.0032	+	0.0862	I	Z =	-0.8500
31	0.0100	+	0.0912	I	Z =	-0.9500
32	0.0174	+	0.0962	I	Z =	-1.0500
33	0.0255	+	0.1011	I	Z =	-1.1500
34	0.0344	+	0.1058	I	Z =	-1.2500

35	0.0441	+	0.1105	I	Z =	-1.3500
36	0.0546	+	0.1150	I	Z =	-1.4500
37	0.0659	+	0.1193	I	Z =	-1.5500
38	0.0998	+	0.1549	I	Z =	-1.6625
39	0.1209	+	0.1610	I	Z =	-1.7875
40	0.1441	+	0.1666	I	Z =	-1.9125
41	0.1696	+	0.1717	I	Z =	-2.0375
42	0.1976	+	0.1763	I	Z =	-2.1625
43	0.2285	+	0.1804	I	Z =	-2.2875
44	0.2630	+	0.1839	I	Z =	-2.4125
45	0.3023	+	0.1868	I	Z =	-2.5375
46	0.3487	+	0.1890	I	Z =	-2.6625
47	0.4077	+	0.1907	I	Z =	-2.7875
48	0.4919	+	0.1917	I	Z =	-2.9125
49	0.7551	+	0.1920	I	Z =	-3.0375
50	0.4919	+	0.1917	I	Z =	-3.1625
51	0.4077	+	0.1907	I	Z =	-3.2875
52	0.4126	+	0.2266	I	Z =	-3.4250
53	0.3480	+	0.2232	I	Z =	-3.5750
54	0.2944	+	0.2186	I	Z =	-3.7250
55	0.2479	+	0.2131	I	Z =	-3.8750
56	0.2068	+	0.2066	I	Z =	-4.0250

BLOCK NO 50 Z DISTANCE = -3.1625

1	-0.0021	+	0.0041	I	R =	0.0625
2	-0.0064	+	0.0123	I	R =	0.1875
3	-0.0083	+	0.0155	I	R =	0.3000
4	-0.0082	+	0.0147	I	R =	0.3875
5	-0.0064	+	0.0112	I	R =	0.4500
6	-0.0035	+	0.0060	I	R =	0.4875
7	-0.0037	+	0.0063	I	R =	0.5125
8	-0.0080	+	0.0133	I	R =	0.5500
9	-0.0089	+	0.0142	I	R =	0.6000
10	-0.0149	+	0.0229	I	R =	0.6625
11	-0.0170	+	0.0246	I	R =	0.7375
12	-0.0191	+	0.0260	I	R =	0.8125
13	-0.0140	+	0.0180	I	R =	0.8750
14	-0.0150	+	0.0184	I	R =	0.9250
15	-0.0079	+	0.0093	I	R =	0.9625
16	-0.0081	+	0.0094	I	R =	0.9875
17	-0.0082	+	0.0095	I	Z =	-0.0125
18	-0.0081	+	0.0098	I	Z =	-0.0375
19	-0.0159	+	0.0205	I	Z =	-0.0750
20	-0.0155	+	0.0217	I	Z =	-0.1250
21	-0.0150	+	0.0229	I	Z =	-0.1750
22	-0.0144	+	0.0241	I	Z =	-0.2250
23	-0.0204	+	0.0385	I	Z =	-0.2875
24	-0.0188	+	0.0413	I	Z =	-0.3625
25	-0.0170	+	0.0441	I	Z =	-0.4375
26	-0.0151	+	0.0470	I	Z =	-0.5125

27	-0.0128	+	0.0498	I	Z =	-0.5875
28	-0.0104	+	0.0527	I	Z =	-0.6625
29	-0.0097	+	0.0747	I	Z =	-0.7500
30	-0.0043	+	0.0799	I	Z =	-0.8500
31	0.0016	+	0.0849	I	Z =	-0.9500
32	0.0082	+	0.0900	I	Z =	-1.0500
33	0.0155	+	0.0950	I	Z =	-1.1500
34	0.0234	+	0.0999	I	Z =	-1.2500
35	0.0321	+	0.1047	I	Z =	-1.3500
36	0.0416	+	0.1093	I	Z =	-1.4500
37	0.0519	+	0.1139	I	Z =	-1.5500
38	0.0806	+	0.1484	I	Z =	-1.6625
39	0.0998	+	0.1549	I	Z =	-1.7875
40	0.1209	+	0.1610	I	Z =	-1.9125
41	0.1441	+	0.1666	I	Z =	-2.0375
42	0.1696	+	0.1717	I	Z =	-2.1625
43	0.1976	+	0.1763	I	Z =	-2.2875
44	0.2285	+	0.1804	I	Z =	-2.4125
45	0.2630	+	0.1839	I	Z =	-2.5375
46	0.3023	+	0.1868	I	Z =	-2.6625
47	0.3487	+	0.1890	I	Z =	-2.7875
48	0.4077	+	0.1907	I	Z =	-2.9125
49	0.4919	+	0.1917	I	Z =	-3.0375
50	0.7551	+	0.1920	I	Z =	-3.1625
51	0.4919	+	0.1917	I	Z =	-3.2875
52	0.4817	+	0.2286	I	Z =	-3.4250
53	0.4008	+	0.2261	I	Z =	-3.5750
54	0.3384	+	0.2225	I	Z =	-3.7250
55	0.2862	+	0.2178	I	Z =	-3.8750
56	0.2407	+	0.2121	I	Z =	-4.0250

BLOCK NO 51 Z DISTANCE = -3.2875

1	-0.0024	+	0.0036	I	R =	0.0625
2	-0.0071	+	0.0107	I	R =	0.1875
3	-0.0092	+	0.0135	I	R =	0.3000
4	-0.0090	+	0.0128	I	R =	0.3875
5	-0.0071	+	0.0097	I	R =	0.4500
6	-0.0038	+	0.0052	I	R =	0.4875
7	-0.0041	+	0.0054	I	R =	0.5125
8	-0.0088	+	0.0115	I	R =	0.5500
9	-0.0096	+	0.0123	I	R =	0.6000
10	-0.0161	+	0.0198	I	R =	0.6625
11	-0.0182	+	0.0212	I	R =	0.7375
12	-0.0203	+	0.0223	I	R =	0.8125
13	-0.0148	+	0.0154	I	R =	0.8750
14	-0.0158	+	0.0157	I	R =	0.9250
15	-0.0083	+	0.0079	I	R =	0.9625
16	-0.0085	+	0.0080	I	R =	0.9875
17	-0.0086	+	0.0081	I	Z =	-0.0125
18	-0.0085	+	0.0084	I	Z =	-0.0375

19	-0.0169	+	0.0176	I	Z =	-0.0750
20	-0.0165	+	0.0188	I	Z =	-0.1250
21	-0.0161	+	0.0199	I	Z =	-0.1750
22	-0.0157	+	0.0211	I	Z =	-0.2250
23	-0.0226	+	0.0339	I	Z =	-0.2875
24	-0.0214	+	0.0367	I	Z =	-0.3625
25	-0.0199	+	0.0394	I	Z =	-0.4375
26	-0.0183	+	0.0422	I	Z =	-0.5125
27	-0.0164	+	0.0451	I	Z =	-0.5875
28	-0.0143	+	0.0479	I	Z =	-0.6625
29	-0.0155	+	0.0683	I	Z =	-0.7500
30	-0.0109	+	0.0735	I	Z =	-0.8500
31	-0.0057	+	0.0786	I	Z =	-0.9500
32	0.0001	+	0.0837	I	Z =	-1.0500
33	0.0065	+	0.0887	I	Z =	-1.1500
34	0.0136	+	0.0937	I	Z =	-1.2500
35	0.0214	+	0.0987	I	Z =	-1.3500
36	0.0299	+	0.1035	I	Z =	-1.4500
37	0.0392	+	0.1082	I	Z =	-1.5500
38	0.0632	+	0.1416	I	Z =	-1.6625
39	0.0806	+	0.1484	I	Z =	-1.7875
40	0.0998	+	0.1549	I	Z =	-1.9125
41	0.1209	+	0.1610	I	Z =	-2.0375
42	0.1441	+	0.1666	I	Z =	-2.1625
43	0.1696	+	0.1717	I	Z =	-2.2875
44	0.1976	+	0.1763	I	Z =	-2.4125
45	0.2285	+	0.1804	I	Z =	-2.5375
46	0.2630	+	0.1839	I	Z =	-2.6625
47	0.3023	+	0.1868	I	Z =	-2.7875
48	0.3487	+	0.1890	I	Z =	-2.9125
49	0.4077	+	0.1907	I	Z =	-3.0375
50	0.4919	+	0.1917	I	Z =	-3.1625
51	0.7551	+	0.1920	I	Z =	-3.2875
52	0.5792	+	0.2299	I	Z =	-3.4250
53	0.4662	+	0.2283	I	Z =	-3.5750
54	0.3894	+	0.2256	I	Z =	-3.7250
55	0.3291	+	0.2218	I	Z =	-3.8750
56	0.2782	+	0.2169	I	Z =	-4.0250

BLOCK NO 52 Z DISTANCE = -3.4250

1	-0.0026	+	0.0031	I	R =	0.0625
2	-0.0078	+	0.0091	I	R =	0.1875
3	-0.0100	+	0.0114	I	R =	0.3000
4	-0.0097	+	0.0108	I	R =	0.3875
5	-0.0076	+	0.0082	I	R =	0.4500
6	-0.0041	+	0.0044	I	R =	0.4875
7	-0.0043	+	0.0046	I	R =	0.5125
8	-0.0094	+	0.0096	I	R =	0.5500
9	-0.0103	+	0.0103	I	R =	0.6000
10	-0.0171	+	0.0165	I	R =	0.6625

11	-0.0192	+	0.0175	I	R =	0.7375
12	-0.0213	+	0.0184	I	R =	0.8125
13	-0.0154	+	0.0126	I	R =	0.8750
14	-0.0163	+	0.0128	I	R =	0.9250
15	-0.0085	+	0.0065	I	R =	0.9625
16	-0.0088	+	0.0065	I	R =	0.9875
17	-0.0089	+	0.0066	I	Z =	-0.0125
18	-0.0088	+	0.0069	I	Z =	-0.0375
19	-0.0175	+	0.0146	I	Z =	-0.0750
20	-0.0173	+	0.0157	I	Z =	-0.1250
21	-0.0171	+	0.0168	I	Z =	-0.1750
22	-0.0168	+	0.0179	I	Z =	-0.2250
23	-0.0245	+	0.0290	I	Z =	-0.2875
24	-0.0236	+	0.0317	I	Z =	-0.3625
25	-0.0224	+	0.0344	I	Z =	-0.4375
26	-0.0211	+	0.0371	I	Z =	-0.5125
27	-0.0197	+	0.0399	I	Z =	-0.5875
28	-0.0180	+	0.0427	I	Z =	-0.6625
29	-0.0210	+	0.0613	I	Z =	-0.7500
30	-0.0171	+	0.0664	I	Z =	-0.8500
31	-0.0127	+	0.0715	I	Z =	-0.9500
32	-0.0077	+	0.0767	I	Z =	-1.0500
33	-0.0022	+	0.0818	I	Z =	-1.1500
34	0.0040	+	0.0868	I	Z =	-1.2500
35	0.0109	+	0.0919	I	Z =	-1.3500
36	0.0184	+	0.0968	I	Z =	-1.4500
37	0.0266	+	0.1017	I	Z =	-1.5500
38	0.0460	+	0.1338	I	Z =	-1.6625
39	0.0616	+	0.1409	I	Z =	-1.7875
40	0.0788	+	0.1478	I	Z =	-1.9125
41	0.0978	+	0.1543	I	Z =	-2.0375
42	0.1187	+	0.1604	I	Z =	-2.1625
43	0.1417	+	0.1660	I	Z =	-2.2875
44	0.1669	+	0.1712	I	Z =	-2.4125
45	0.1946	+	0.1759	I	Z =	-2.5375
46	0.2252	+	0.1800	I	Z =	-2.6625
47	0.2593	+	0.1836	I	Z =	-2.7875
48	0.2981	+	0.1865	I	Z =	-2.9125
49	0.3436	+	0.1888	I	Z =	-3.0375
50	0.4010	+	0.1905	I	Z =	-3.1625
51	0.4820	+	0.1916	I	Z =	-3.2875
52	0.8630	+	0.2304	I	Z =	-3.4250
53	0.5676	+	0.2298	I	Z =	-3.5750
54	0.4588	+	0.2281	I	Z =	-3.7250
55	0.3839	+	0.2253	I	Z =	-3.8750
56	0.3246	+	0.2214	I	Z =	-4.0250

BLOCK NO 53 Z DISTANCE = -3.5750

1	-0.0027	+	0.0025	I	R =	0.0625
2	-0.0082	+	0.0073	I	R =	0.1875

3	-0.0105	+	0.0092	I	R	=	0.3000
4	-0.0102	+	0.0087	I	R	=	0.3875
5	-0.0079	+	0.0066	I	R	=	0.4500
6	-0.0043	+	0.0035	I	R	=	0.4875
7	-0.0045	+	0.0036	I	R	=	0.5125
8	-0.0097	+	0.0077	I	R	=	0.5500
9	-0.0106	+	0.0082	I	R	=	0.6000
10	-0.0177	+	0.0130	I	R	=	0.6625
11	-0.0197	+	0.0138	I	R	=	0.7375
12	-0.0218	+	0.0144	I	R	=	0.8125
13	-0.0157	+	0.0098	I	R	=	0.8750
14	-0.0166	+	0.0099	I	R	=	0.9250
15	-0.0086	+	0.0049	I	R	=	0.9625
16	-0.0089	+	0.0049	I	R	=	0.9875
17	-0.0090	+	0.0051	I	Z	=	-0.0125
18	-0.0090	+	0.0053	I	Z	=	-0.0375
19	-0.0179	+	0.0114	I	Z	=	-0.0750
20	-0.0178	+	0.0124	I	Z	=	-0.1250
21	-0.0177	+	0.0135	I	Z	=	-0.1750
22	-0.0175	+	0.0146	I	Z	=	-0.2250
23	-0.0259	+	0.0239	I	Z	=	-0.2875
24	-0.0253	+	0.0265	I	Z	=	-0.3625
25	-0.0245	+	0.0290	I	Z	=	-0.4375
26	-0.0236	+	0.0317	I	Z	=	-0.5125
27	-0.0224	+	0.0344	I	Z	=	-0.5875
28	-0.0211	+	0.0371	I	Z	=	-0.6625
29	-0.0258	+	0.0538	I	Z	=	-0.7500
30	-0.0227	+	0.0588	I	Z	=	-0.8500
31	-0.0191	+	0.0639	I	Z	=	-0.9500
32	-0.0150	+	0.0690	I	Z	=	-1.0500
33	-0.0103	+	0.0741	I	Z	=	-1.1500
34	-0.0050	+	0.0792	I	Z	=	-1.2500
35	0.0009	+	0.0842	I	Z	=	-1.3500
36	0.0074	+	0.0894	I	Z	=	-1.4500
37	0.0145	+	0.0944	I	Z	=	-1.5500
38	0.0293	+	0.1248	I	Z	=	-1.6625
39	0.0430	+	0.1323	I	Z	=	-1.7875
40	0.0583	+	0.1395	I	Z	=	-1.9125
41	0.0752	+	0.1464	I	Z	=	-2.0375
42	0.0939	+	0.1530	I	Z	=	-2.1625
43	0.1144	+	0.1592	I	Z	=	-2.2875
44	0.1369	+	0.1649	I	Z	=	-2.4125
45	0.1617	+	0.1702	I	Z	=	-2.5375
46	0.1889	+	0.1750	I	Z	=	-2.6625
47	0.2189	+	0.1792	I	Z	=	-2.7875
48	0.2522	+	0.1829	I	Z	=	-2.9125
49	0.2899	+	0.1860	I	Z	=	-3.0375
50	0.3338	+	0.1884	I	Z	=	-3.1625
51	0.3881	+	0.1903	I	Z	=	-3.2875
52	0.5676	+	0.2298	I	Z	=	-3.4250
53	0.8630	+	0.2304	I	Z	=	-3.5750
54	0.5676	+	0.2298	I	Z	=	-3.7250
55	0.4588	+	0.2281	I	Z	=	-3.8750

56	0.3839	+	0.2253	I	Z =	-4.0250

BLOCK NO 54 Z DISTANCE = -3.7250

1	-0.0028	+	0.0019	I	R =	0.0625
2	-0.0084	+	0.0057	I	R =	0.1875
3	-0.0108	+	0.0071	I	R =	0.3000
4	-0.0105	+	0.0067	I	R =	0.3875
5	-0.0081	+	0.0050	I	R =	0.4500
6	-0.0044	+	0.0027	I	R =	0.4875
7	-0.0046	+	0.0028	I	R =	0.5125
8	-0.0099	+	0.0059	I	R =	0.5500
9	-0.0108	+	0.0062	I	R =	0.6000
10	-0.0179	+	0.0098	I	R =	0.6625
11	-0.0199	+	0.0103	I	R =	0.7375
12	-0.0218	+	0.0106	I	R =	0.8125
13	-0.0156	+	0.0071	I	R =	0.8750
14	-0.0165	+	0.0071	I	R =	0.9250
15	-0.0086	+	0.0035	I	R =	0.9625
16	-0.0088	+	0.0035	I	R =	0.9875
17	-0.0089	+	0.0036	I	Z =	-0.0125
18	-0.0089	+	0.0038	I	Z =	-0.0375
19	-0.0179	+	0.0084	I	Z =	-0.0750
20	-0.0179	+	0.0094	I	Z =	-0.1250
21	-0.0179	+	0.0104	I	Z =	-0.1750
22	-0.0179	+	0.0114	I	Z =	-0.2250
23	-0.0267	+	0.0190	I	Z =	-0.2875
24	-0.0263	+	0.0214	I	Z =	-0.3625
25	-0.0259	+	0.0239	I	Z =	-0.4375
26	-0.0253	+	0.0265	I	Z =	-0.5125
27	-0.0245	+	0.0290	I	Z =	-0.5875
28	-0.0236	+	0.0317	I	Z =	-0.6625
29	-0.0296	+	0.0465	I	Z =	-0.7500
30	-0.0272	+	0.0513	I	Z =	-0.8500
31	-0.0243	+	0.0563	I	Z =	-0.9500
32	-0.0210	+	0.0613	I	Z =	-1.0500
33	-0.0171	+	0.0664	I	Z =	-1.1500
34	-0.0127	+	0.0715	I	Z =	-1.2500
35	-0.0077	+	0.0767	I	Z =	-1.3500
36	-0.0022	+	0.0818	I	Z =	-1.4500
37	0.0040	+	0.0868	I	Z =	-1.5500
38	0.0147	+	0.1156	I	Z =	-1.6625
39	0.0267	+	0.1233	I	Z =	-1.7875
40	0.0402	+	0.1308	I	Z =	-1.9125
41	0.0551	+	0.1381	I	Z =	-2.0375
42	0.0717	+	0.1451	I	Z =	-2.1625
43	0.0900	+	0.1517	I	Z =	-2.2875
44	0.1101	+	0.1580	I	Z =	-2.4125
45	0.1323	+	0.1638	I	Z =	-2.5375
46	0.1565	+	0.1692	I	Z =	-2.6625
47	0.1832	+	0.1741	I	Z =	-2.7875
48	0.2126	+	0.1784	I	Z =	-2.9125

49	0.2452	+	0.1822	I	Z =	-3.0375
50	0.2819	+	0.1854	I	Z =	-3.1625
51	0.3243	+	0.1880	I	Z =	-3.2875
52	0.4588	+	0.2281	I	Z =	-3.4250
53	0.5676	+	0.2298	I	Z =	-3.5750
54	0.8630	+	0.2304	I	Z =	-3.7250
55	0.5676	+	0.2298	I	Z =	-3.8750
56	0.4588	+	0.2281	I	Z =	-4.0250

BLOCK NO 55 Z DISTANCE = -3.8750

1	-0.0028	+	0.0014	I	R =	0.0625
2	-0.0085	+	0.0042	I	R =	0.1875
3	-0.0108	+	0.0052	I	R =	0.3000
4	-0.0105	+	0.0048	I	R =	0.3875
5	-0.0081	+	0.0036	I	R =	0.4500
6	-0.0044	+	0.0019	I	R =	0.4875
7	-0.0046	+	0.0020	I	R =	0.5125
8	-0.0098	+	0.0042	I	R =	0.5500
9	-0.0107	+	0.0044	I	R =	0.6000
10	-0.0177	+	0.0068	I	R =	0.6625
11	-0.0196	+	0.0071	I	R =	0.7375
12	-0.0215	+	0.0071	I	R =	0.8125
13	-0.0154	+	0.0047	I	R =	0.8750
14	-0.0162	+	0.0046	I	R =	0.9250
15	-0.0084	+	0.0022	I	R =	0.9625
16	-0.0086	+	0.0022	I	R =	0.9875
17	-0.0087	+	0.0023	I	Z =	-0.0125
18	-0.0087	+	0.0025	I	Z =	-0.0375
19	-0.0176	+	0.0056	I	Z =	-0.0750
20	-0.0177	+	0.0065	I	Z =	-0.1250
21	-0.0178	+	0.0075	I	Z =	-0.1750
22	-0.0179	+	0.0084	I	Z =	-0.2250
23	-0.0269	+	0.0144	I	Z =	-0.2875
24	-0.0268	+	0.0167	I	Z =	-0.3625
25	-0.0267	+	0.0190	I	Z =	-0.4375
26	-0.0263	+	0.0214	I	Z =	-0.5125
27	-0.0259	+	0.0239	I	Z =	-0.5875
28	-0.0253	+	0.0265	I	Z =	-0.6625
29	-0.0325	+	0.0393	I	Z =	-0.7500
30	-0.0307	+	0.0440	I	Z =	-0.8500
31	-0.0285	+	0.0489	I	Z =	-0.9500
32	-0.0258	+	0.0538	I	Z =	-1.0500
33	-0.0227	+	0.0588	I	Z =	-1.1500
34	-0.0191	+	0.0639	I	Z =	-1.2500
35	-0.0150	+	0.0690	I	Z =	-1.3500
36	-0.0103	+	0.0741	I	Z =	-1.4500
37	-0.0050	+	0.0792	I	Z =	-1.5500
38	0.0021	+	0.1062	I	Z =	-1.6625
39	0.0125	+	0.1141	I	Z =	-1.7875
40	0.0242	+	0.1218	I	Z =	-1.9125

41	0.0374	+	0.1293	I	Z =	-2.0375
42	0.0520	+	0.1367	I	Z =	-2.1625
43	0.0683	+	0.1437	I	Z =	-2.2875
44	0.0862	+	0.1504	I	Z =	-2.4125
45	0.1059	+	0.1568	I	Z =	-2.5375
46	0.1277	+	0.1627	I	Z =	-2.6625
47	0.1515	+	0.1682	I	Z =	-2.7875
48	0.1777	+	0.1731	I	Z =	-2.9125
49	0.2065	+	0.1776	I	Z =	-3.0375
50	0.2384	+	0.1815	I	Z =	-3.1625
51	0.2742	+	0.1848	I	Z =	-3.2875
52	0.3839	+	0.2253	I	Z =	-3.4250
53	0.4588	+	0.2281	I	Z =	-3.5750
54	0.5676	+	0.2298	I	Z =	-3.7250
55	0.8630	+	0.2304	I	Z =	-3.8750
56	0.5676	+	0.2298	I	Z =	-4.0250

BLOCK NO 56 Z DISTANCE = -4.0250

1	-0.0028	+	0.0009	I	R =	0.0625
2	-0.0083	+	0.0028	I	R =	0.1875
3	-0.0106	+	0.0034	I	R =	0.3000
4	-0.0102	+	0.0031	I	R =	0.3875
5	-0.0079	+	0.0023	I	R =	0.4500
6	-0.0043	+	0.0012	I	R =	0.4875
7	-0.0045	+	0.0013	I	R =	0.5125
8	-0.0096	+	0.0026	I	R =	0.5500
9	-0.0104	+	0.0027	I	R =	0.6000
10	-0.0172	+	0.0041	I	R =	0.6625
11	-0.0190	+	0.0041	I	R =	0.7375
12	-0.0208	+	0.0039	I	R =	0.8125
13	-0.0148	+	0.0025	I	R =	0.8750
14	-0.0155	+	0.0023	I	R =	0.9250
15	-0.0080	+	0.0010	I	R =	0.9625
16	-0.0082	+	0.0010	I	R =	0.9875
17	-0.0083	+	0.0010	I	Z =	-0.0125
18	-0.0084	+	0.0012	I	Z =	-0.0375
19	-0.0170	+	0.0031	I	Z =	-0.0750
20	-0.0172	+	0.0039	I	Z =	-0.1250
21	-0.0174	+	0.0048	I	Z =	-0.1750
22	-0.0176	+	0.0056	I	Z =	-0.2250
23	-0.0266	+	0.0101	I	Z =	-0.2875
24	-0.0268	+	0.0122	I	Z =	-0.3625
25	-0.0269	+	0.0144	I	Z =	-0.4375
26	-0.0268	+	0.0167	I	Z =	-0.5125
27	-0.0267	+	0.0190	I	Z =	-0.5875
28	-0.0263	+	0.0214	I	Z =	-0.6625
29	-0.0344	+	0.0324	I	Z =	-0.7500
30	-0.0332	+	0.0370	I	Z =	-0.8500
31	-0.0316	+	0.0417	I	Z =	-0.9500
32	-0.0296	+	0.0465	I	Z =	-1.0500

33	-0.0272	+	0.0513	I	Z =	-1.1500
34	-0.0243	+	0.0563	I	Z =	-1.2500
35	-0.0210	+	0.0613	I	Z =	-1.3500
36	-0.0171	+	0.0664	I	Z =	-1.4500
37	-0.0127	+	0.0715	I	Z =	-1.5500
38	-0.0088	+	0.0966	I	Z =	-1.6625
39	0.0001	+	0.1046	I	Z =	-1.7875
40	0.0103	+	0.1125	I	Z =	-1.9125
41	0.0218	+	0.1203	I	Z =	-2.0375
42	0.0346	+	0.1279	I	Z =	-2.1625
43	0.0490	+	0.1352	I	Z =	-2.2875
44	0.0649	+	0.1423	I	Z =	-2.4125
45	0.0825	+	0.1491	I	Z =	-2.5375
46	0.1018	+	0.1555	I	Z =	-2.6625
47	0.1232	+	0.1615	I	Z =	-2.7875
48	0.1466	+	0.1671	I	Z =	-2.9125
49	0.1722	+	0.1722	I	Z =	-3.0375
50	0.2005	+	0.1768	I	Z =	-3.1625
51	0.2317	+	0.1808	I	Z =	-3.2875
52	0.3246	+	0.2214	I	Z =	-3.4250
53	0.3839	+	0.2253	I	Z =	-3.5750
54	0.4588	+	0.2281	I	Z =	-3.7250
55	0.5676	+	0.2298	I	Z =	-3.8750
56	0.8630	+	0.2304	I	Z =	-4.0250

CALCULATE PHI'S FROM BOX INTEGRATION MATRIX
05/19/71 SEMI-INFINITE CIRCULAR DUCT

INK= 0 N= 40 M= 16 MW= 0 LP= 8 L= 30 NN= 2 KDF= 0 N2= 0
B2= 0.500 AINK= 0.0 PI2= 6.28318 A= 0.0 R= 1.000 CHK=0.000100
W= 343.0000 S= 343.0000

C BUFFER (-Z)

2.5000D-02	2.5000D-02	5.0000D-02	5.0000D-02
5.0000D-02	5.0000D-02	7.5000D-02	7.5000D-02
7.5000D-02	7.5000D-02	7.5000D-02	7.5000D-02
1.0000D-01	1.0000D-01	1.0000D-01	1.0000D-01
1.0000D-01	1.0000D-01	1.0000D-01	1.0000D-01
1.0000D-01	1.2500D-01	1.2500D-01	1.2500D-01
1.2500D-01	1.2500D-01	1.2500D-01	1.2500D-01
1.2500D-01	1.2500D-01	1.2500D-01	1.2500D-01
1.2500D-01	1.2500D-01	1.2500D-01	1.5000D-01
1.5000D-01	1.5000D-01	1.5000D-01	1.5000D-01

C BUFFER (R)

1.2500D-01	1.2500D-01	1.0000D-01	7.5000D-02
5.0000D-02	2.5000D-02	2.5000D-02	5.0000D-02
5.0000D-02	7.5000D-02	7.5000D-02	7.5000D-02
5.0000D-02	5.0000D-02	2.5000D-02	2.5000D-02

CONDITION NO. = 7.175345340 00

-0.0605	0.0440	I	R =	0.0625	V =	1.00	0.0
-0.0707	0.0486	I	R =	0.1875	V =	1.00	0.0
-0.0907	0.0578	I	R =	0.3000	V =	1.00	0.0
-0.1165	0.0696	I	R =	0.3875	V =	1.00	0.0
-0.1427	0.0815	I	R =	0.4500	V =	1.00	0.0
-0.1628	0.0907	I	R =	0.4875	V =	1.00	0.0
-0.1784	0.0978	I	R =	0.5125	V =	1.00	0.0
-0.2060	0.1105	I	R =	0.5500	V =	1.00	0.0
-0.2527	0.1318	I	R =	0.6000	V =	1.00	0.0
-0.3338	0.1689	I	R =	0.6625	V =	1.00	0.0
-0.4856	0.2383	I	R =	0.7375	V =	1.00	0.0
-0.7459	0.3577	I	R =	0.8125	V =	1.00	0.0
-1.1019	0.5210	I	R =	0.8750	V =	1.00	0.0
-1.3607	0.6386	I	R =	0.9250	V =	1.00	0.0
-0.1685	0.0813	I	R =	0.9625	V =	1.00	0.0
9.2323 3	-4.2921	I	R =	0.9875	V =	1.00	0.0
-52.4629	24.3952	I	Z =	-0.0125			
3.3056	-1.5255	I	Z =	-0.0375			
9.5980	-4.4409	I	Z =	-0.0750			
6.3096	-2.9058	I	Z =	-0.1250			
3.5175	-1.6060	I	Z =	-0.1750			
1.9423	-0.8739	I	Z =	-0.2250			
0.9676	-0.4222	I	Z =	-0.2875			
0.4561	-0.1866	I	Z =	-0.3625			
0.2336	-0.0853	I	Z =	-0.4375			
0.1247	-0.0368	I	Z =	-0.5125			
0.0655	-0.0112	I	Z =	-0.5875			
0.0310	0.0032	I	Z =	-0.6625			
0.0070	0.0124	I	Z =	-0.7500			
-0.0084	0.0177	I	Z =	-0.8500			
-0.0163	0.0197	I	Z =	-0.9500			
-0.0201	0.0199	I	Z =	-1.0500			
-0.0213	0.0191	I	Z =	-1.1500			
-0.0212	0.0177	I	Z =	-1.2500			
-0.0202	0.0162	I	Z =	-1.3500			
-0.0189	0.0145	I	Z =	-1.4500			
-0.0174	0.0128	I	Z =	-1.5500			
-0.0157	0.0110	I	Z =	-1.6625			
-0.0139	0.0092	I	Z =	-1.7875			
-0.0124	0.0075	I	Z =	-1.9125			
-0.0110	0.0060	I	Z =	-2.0375			
-0.0099	0.0048	I	Z =	-2.1625			
-0.0089	0.0036	I	Z =	-2.2875			
-0.0081	0.0026	I	Z =	-2.4125			
-0.0073	0.0018	I	Z =	-2.5375			
-0.0067	0.0010	I	Z =	-2.6625			
-0.0061	0.0003	I	Z =	-2.7875			
-0.0056	-0.0003	I	Z =	-2.9125			
-0.0050	-0.0008	I	Z =	-3.0375			
-0.0045	-0.0013	I	Z =	-3.1625			

```
-0.0040    -0.0017 I        Z =     -3.2875
-0.0035    -0.0021 I        Z =     -3.4250
-0.0028    -0.0026 I        Z =     -3.5750
-0.0021    -0.0032 I        Z =     -3.7250
-0.0013    -0.0043 I        Z =     -3.8750
 0.0004    -0.0082 I        Z =     -4.0250
```